Revised

GEOTECHNICAL INVESTIGATION REPORT

FOR PROPOSED DEVELOPMENT AT 127 1ST LINE, ELORA, TOWNSHIP OF CENTRE WELLINGTON, ONTARIO

Client

Elora Greens Inc.
120 Matheson Blvd. E., Unit 3
Mississauga, ON L4Z 1X1

Prepared by:

PLANET ENGINEERING Inc.
Consulting Engineers

2179 Dunwin Drive, Unit 4
Mississauga, ON L5L 1X2

Project No. 2501179BG

September 11, 2026

PLANET ENGINEERING Inc.
Consulting Engineers

September 11, 2026 Reference No.2501179BG

Elora Greens Inc.
120 Matheson Blvd. E., Unit 3
Mississauga, ON L4Z 1X1

Attention: Farhan Kamali Siddiqui
Email: farhan@eloragreens.com

Dear Mr. Siddiqui,

RE: Geotechnical Investigation Report for the Proposed Development
127 1st Line, Elora, Township of Centre Wellington, ON

Enclosed is a copy of geotechnical investigation report related to the above noted site.

For and on behalf of PLANET Engineering Inc

Irfan Ahmad Khokhar, Ph.D., P.Eng., Consulting Engineer
Principal Geotechnical Engineer

Executive Summary

Planet Engineering Inc (PLANET) was retained by Elora Greens Inc. (the Client) to complete a geotechnical investigation to evaluate the site conditions at proposed development area at 127 First Line, Township of Centre Wellington, Ontario. (The Site).

Based on the information and updated March 2026 conceptual plan provided by the Client, we understand that the proposed land uses for the Site include approximately 9.33 hectares of low-density residential development (single-detached, semi-detached, and street townhouse units); 1.75 hectares of multiple residential uses; 0.99 hectares of mixed-use development; 2.34 hectares designated for park and trail uses; and 1.99 hectares for a stormwater management (SWM) facility.

PLANET does not have any structural information regarding the proposed development.

The purpose of this investigation was to assess the subsurface conditions at the site and provide geotechnical engineering advice and recommendations.

PLANET Engineering Inc completed a geotechnical investigation for the proposed development at the site. This investigation was carried out by drilling ten (10) boreholes (BH1 to BH10) spread on the whole site to maximum depths of 6.4m to 7.6m below the existing ground surface. Based on the field investigation and laboratory testing, geotechnical findings and geotechnical engineering recommendations are provided in this report. The approximate locations of these boreholes (BH1 to BH10) are shown on Drawing 1A and the borehole logs from the investigation are attached in Appendix B.

A top layer of 150 to 300 mm thick topsoil was encountered at all borehole locations (BH1 to BH10). It should be noted that the topsoil thicknesses provided here were measured at the borehole locations only and may vary beyond the boreholes.

A layer of fill/disturbed native was encountered at all borehole locations below topsoil and extended in general to approximately from 0.5m to 1.1m below the existing ground surface. The fill/disturbed native consisted of sandy silt till, trace to some clay & gravel, was typically in very loose to compact state.

Native materials were encountered underlying the fill/disturbed native in all the boreholes and found to be very consistent. Native materials consisting of non cohesive materials i.e., very loose to very dense sandy silt till to silty sand till with trace to some clay & gravel, were encountered at all borehole locations and extended in general to full depth of exploration i.e., 7.6m below the existing ground surface.

Boreholes BH1 to BH10 were drilled and sampled within the approximate footprint of the proposed structures. The proposed structures can be supported by conventional spread and strip footings founded on undisturbed native deposits predominantly silty sand till to sandy silt till for a geotechnical reaction of 75kPa to 200kPa at the Serviceability Limit States (SLS), and for a factored geotechnical resistance of 110kPa to 300kPa at the Ultimate Limit States (ULS). The geotechnical reactions and factored geotechnical resistances including the corresponding highest founding elevations at the borehole locations are summarized in Table 4.1. The recommended founding levels and geotechnical reactions for the proposed structures would need to be confirmed by PLANET at the time of construction.

Alternatively, the proposed structures can be supported by conventional spread and strip footings founded on engineered fill for a geotechnical reaction of 100kPa at the Serviceability Limit States (SLS) and a factored geotechnical resistance of 150kPa ULS. The engineered fill supporting footings should be constructed in accordance with the guidelines presented in Appendix C. Other requirements of engineered fill are given in Section 4.1.1

The floor slab can be supported on grade, provided all topsoil, existing weathered/disturbed and surficially softened or loose materials are removed, and the subgrade thoroughly proof rolled. Any loose spots or areas revealed from proof rolling must be sub-excavated, backfilled and compacted.

Prior to the placement of the engineered fill, all of the existing weathered/disturbed and softened or loose native soils must be removed, and the exposed surface proof rolled. The depths of sub-excavation required for the construction of engineered fill at the borehole locations ranged from 0.9m to 1.1m.

During and upon completion of drilling, short-term groundwater was observed at borehole locations BH1 to BH8, ranging from 1.1 m to 2.4 m below the existing ground surface. Monitoring wells were installed at five borehole locations: BH1, BH4, BH6, BH7, and BH10. Groundwater level measurements were made at different times to observe water level fluctuations in the monitoring wells and presented in Table 3.2 of this report.

Based on water table readings obtained between June 19, 2025 & April 9, 2026, the groundwater level varied from 0.10m to 5.52m below the existing ground surface, corresponding to a geodetic elevation of 390.31m to 397.0m.

Groundwater is expected to be encountered during the excavation and installation of foundations below the existing ground surface. Dewatering will be required to deal with water problems during the construction. Details of dewatering requirement are provided in a hydrogeological investigation report prepared by Planet Engineering Inc.

Note that the groundwater level can vary and is subject to seasonal fluctuations and in response to major weather events. The depth of groundwater table can also be influenced by the presence of underground features such as utility trenches, and this may affect the construction procedures, costs and schedules. The possibility of groundwater level fluctuations at the site should be considered when designing and developing the construction plans for the project.

All excavations must be carried out in accordance with the most recent Occupational Health and Safety Act (OHSA). As a general rule, the excavations in Type 1 and 2 soils can be carried out without support using side slopes 1H:1V, while the bottom 1.2m of the excavation can be cut vertically and could retain the wall for a short period of time. The excavation in Type 3 soil can be carried out maintaining the side slopes not steeper than 1H:1V. The excavations in Type 4 soils will require minimum flatter side slopes of 3H to 1V. These slopes should be visually monitored for any movement especially if workers are present within the excavation. These temporary slopes should only be utilized for a short duration. If an excavation contains more than one type of soil, the soil shall be classified as the type with the highest number among the types present.

Based on the borehole information, the subject site for the proposed building can be classified as Class ‘D’ for seismic site response according to Table 4.1.8.4.A of OBC 2024 provided the footings will be supported on undisturbed native deposits. Consideration could be given to conduct an earthquake site assessment with the use of in-situ testing of the seismic characteristics (i.e. Geophysical testing – Multi-channel Analysis of Surface Waves-MASW) which can lead to an improved site classification (i.e. from Class D to Class C).

TABLE OF CONTENTS

1 INTRODUCTION 1
2 FIELD AND LABORATORY WORK 2
3 RESULTS OF THE INVESTIGATION 3
3.1 Subsurface Conditions 3
3.1.1 Topsoil 3
3.1.1 Fill/Disturbed Native Soil 3
3.1.2 Native Soils 3
3.2 Groundwater Conditions 4
4 DISCUSSION AND RECOMMENDATIONS 5
4.1 Site Grading 5
4.1.1 Engineered Fill 5
4.2 Foundations 6
4.2.1 Footings founded on Native Soils 6
4.2.2 Foundation on Engineered Fill 8
4.2.3 Other Comments on Foundations 8
4.3 Storm Water Management Pond Construction 9
4.4 Floor Slab and Permanent Drainage 10
4.5 Frost Susceptibility of Soils 11
4.6 Excavations and Backfill 11
4.7 Earth Pressures 11
4.8 Earthquake Considerations 12
4.9 Underground Utility Trenches 12
4.9.1 Trenching 12
4.9.2 Bedding 12
4.9.3 Thrust Blocks 13
4.9.4 Backfilling of Trenches 14
4.10 Pavements 14
4.10.1 Ideal Conditions 14
4.10.2 Non-Ideal Conditions 14
4.10.3 Stripping, Sub-excavation and Grading 17
4.10.4 Construction 17
4.10.5 Drainage 17
4.11 Engineered Fill and Sub-Excavation 17
4.12 Geotechnical Review 19
5 GENERAL COMMENTS 20

Drawings

	Drawing No.
Site Key Plan	1
Borehole Location Plan	1A
Notes on Sample Descriptions	1B
Sieve and Hydrometer Grain Size Analyses	2
Perimeter Drainage System for Open-Cut Excavation	3
Thrust Blocks	4
Foundation Wall Reinforcing on Engineered Fill Typical Detail	5

Tables

Table 2.1: Sample Details for Grain Size Analyses

Table 3.1: Summary of Grain-Size Distribution

Table 3.2: Summary of Groundwater Level Observations in Installed Monitoring Wells

Table 4.1: Bearing Values & Founding Levels of Footings on Native Soils

Table 4.2: Reduction Factors for Thrust Blocks

Table 4.3: Recommended Pavement Structure Thickness

Table 4.4: Minimum Rigid Concrete Pavement Structure

Appendices

Appendix A Limitations of Report

Appendix B Borehole Logs

Appendix C General Requirements for Engineered Fill

Appendix D Proposed Site Plan Provided by the Client

1 INTRODUCTION

PLANET Engineering Inc (PLANET) was retained by Elora Greens Inc. (the Client) to complete a geotechnical investigation to evaluate the site conditions at proposed development area at 127 First Line, Township of Centre Wellington, Ontario. (The Site). The site key plan and approximate locations of the boreholes are shown on Drawings 1 and 1A.

This work was conducted in accordance with our proposal 2501179BG dated, May 05, 2025. Authorization to Proceed (ATP) was issued to PLANET on May 14, 2025.

Based on the information and updated March 2026 conceptual plan provided by the Client, we understand that the proposed land uses for the Site include approximately 9.33 hectares of low-density residential development (single-detached, semi-detached, and street townhouse units); 1.75 hectares of multiple residential uses; 0.99 hectares of mixed-use development; 2.34 hectares designated for park and trail uses; and 1.99 hectares for a stormwater management (SWM) facility.

PLANET does not have any structural information regarding the proposed development.

The purpose of this investigation was to assess the subsurface conditions at ten borehole locations (BH1 to BH10) and from the findings in the boreholes make geotechnical engineering recommendations for the following:

- Design parameters required by the structural engineer/civil engineer
- Soil characteristics and drainage recommendations
- Comments related to earth pressures
- Frost susceptibility of all soils in the upper 1.2 metres
- Special precautions specific to this site
- The use of the excavated soil
- Drainage recommendations
- seismic considerations.
- Recommendations for Asphalt pavement structure designs for roads and parking lots.

This report is provided based on the terms of reference presented above and, in the text, and on the assumption that the design will be in accordance with the applicable codes and standards. If there is any change in the design features relevant to the geotechnical analyses, or if any question arises concerning the geotechnical aspects of the codes and standards, PLANET should be contacted to review the design. It may then be necessary to carry out additional borings and reporting before the recommendations of PLANET can be relied upon.

The site investigation and recommendations follow generally accepted practice for geotechnical consultants in Ontario. The format and contents are guided by client specific needs and economics and do not conform to generalized standards for services. Laboratory testing for most part follows ASTM or CSA Standards or modifications of these standards that have become standard practice.

This report has been prepared for the Elora Greens Inc. (the Client), and its architects, consultants, contractors, and designers. Third party use of this report without PLANET's consent is prohibited. The limitation conditions presented in Appendix A form an integral part of the report and they must be considered in conjunction with this report.

2 FIELD AND LABORATORY WORK

Borehole locations for this investigation were established in and marked on the ground by PLANET personnel in accordance with the client requirements. Prior to drilling operations, underground utilities were cleared at the borehole locations by the public utilities' companies. A private utility locate company was retained by PLANET to locate 'locatable' private underground utility lines and clear the borehole locations prior to the drilling.

For this geotechnical investigation, ten boreholes (BH1 to BH10) were drilled to the depths ranging from 6.4m to 7.6m on June 10,11 & 16 2025. The boreholes were advanced by a drilling sub-contractor, under the supervision of PLANET personnel. The boreholes were advanced by utilizing continuous flight solid stem augers. Samples were retrieved at regular intervals with a 50 mm O.D. split-barrel sampler driven with a hammer weighing 624 N (63.5 kg) and dropping 760 mm in accordance with the Standard Penetration Test (SPT) method (ASTM D1586). The number of blows of the hammer required to drive the sampler into the relatively undisturbed ground by a vertical distance of 300 mm (12 inches) was recorded as SPT 'N' value of the soil which indicated the consistency of cohesive soils or compactness of non-cohesive soils. The results of SPT are shown in the Record of Boreholes. The samples were logged in the field and returned to the PLANET laboratory for detailed examination by the project engineer and for laboratory testing. The approximate borehole locations are shown on Drawing 1A.

Water level observations were made during drilling and at the completion of the drilling operations. Upon completion of drilling, each borehole was backfilled in accordance with current regulations.

The locations of the boreholes were established in the field by PLANET. The borehole elevations and locations were surveyed and established by the PLANET staff. Note, these elevations are approximate only, for relating borehole soil stratigraphy and should not be used or relied on for other purposes.

As well as visual examination in the laboratory, soil samples were tested for water content determinations. Grain size analyses were carried out on selected soil samples as presented in Table 2.1. The results of the laboratory tests are presented on the borehole logs, and also on Drawing 2.

Table 2.1: Sample Details for Grain Size Analyses

Sample No.	Approximate Depth Below the Existing Ground Surface (m)	Approximate Local Elevation (m)	Type of Test	Lab Results
BH1-SS2	0.8 – 1.4	396.6 – 396.0	MH	Drawing 2
BH2-SS4	2.3 – 2.9	394.6 – 394.0	MH	Drawing 2
BH2-SS6	4.6 - 5.2	392.3 – 391.7	MH	Drawing 2
BH3-SS3	1.5 – 2.1	395.2 – 394.6	MH	Drawing 2
BH5-SS4	2.3 – 2.9	395.9 – 395.3	MH	Drawing 2
BH6-SS5	3.1 – 3.7	387.3 – 386.7	MH	Drawing 2
BH8-SS4	2.3 – 2.9	393.1 – 392.5	MH	Drawing 2
BH10-SS3	1.5 – 2.1	397.2 – 396.6	MH	Drawing 2

Notes: M stands for sieve analysis. MH stands for sieve and hydrometer grain size analyses. The results of grain size analyses are presented on subject referenced drawings.

3 RESULTS OF THE INVESTIGATION

The site is located at 127 First Line, Township of Centre Wellington, Ontario (the Site). The site key plan and the borehole locations are presented on Drawings 1 and 1A. Notes on sample descriptions and the general features of fill material and native soils are presented on Drawing 1B. Detailed subsurface conditions are presented on borehole log sheets, attached as Appendix B.

Details of the subsurface conditions encountered at the borehole locations are provided on the borehole logs following the text of this report. The borehole logs indicate the subsurface conditions only at the borehole locations. Note the material boundaries indicated on the attached sheets are approximate and based on visual observations. These boundaries typically represent a transition from one material type to another and should not be regarded as an exact plane of geological change. It should be pointed out that the subsurface conditions will vary across this site.

3.1 Subsurface Conditions

This investigation was carried out by drilling ten (10) boreholes (BH1 to BH10) spread on the whole site to maximum depths of 6.4m to 7.6m below the existing ground surface. The subsurface soil and groundwater conditions are summarized as follows.

3.1.1 Topsoil

A top layer of 150 to 300 mm thick topsoil was encountered at all borehole locations (BH1 to BH10). It should be noted that the topsoil thicknesses provided here were measured at the borehole locations only and may vary beyond the boreholes.

3.1.1 Fill/Disturbed Native Soil

A layer of fill/disturbed native was encountered at all borehole locations below topsoil and extended in general to approximately from 0.5m to 1.1m below the existing ground surface. The fill/disturbed native consisted of sandy silt till, trace to some clay & gravel, was typically in very loose to compact state.

Based on the visual observation in the field and our experience in the area, it appears that these SPT N values are not representative to determine the compactness. It also indicates that the fill did not receive systematic compaction. It should be noted that the thickness of fill could vary between and beyond boreholes and this should be considered when estimating.

3.1.2 Native Soils

Native materials were encountered underlying the fill/disturbed native in all the boreholes and found to be very consistent. Native materials consisting of non cohesive materials i.e. very loose to very dense sandy silt till to silty sand till with trace to some clay & gravel were encountered at all borehole locations and extended in general to full depth of exploration i.e., 7.6m below the existing ground surface.

The grain-size distribution of selected soil samples from native deposits is enclosed in Drawing 2, and results are summarized in Table 3.1.

Table 3.1: Summary of Grain-Size Distribution

Sample No.	Depth Below the Existing Ground Surface (m)	Sieve and Hydrometer Test Results			
		Gravel %	Sand %	Silt %	Clay %
BH1-SS2	0.8 – 1.4	10	39	42	9
BH2-SS4	2.3 – 2.9	22	37	34	7
BH2-SS6	4.6 - 5.2	18	36	36	10
BH3-SS3	1.5 – 2.1	16	34	41	9
BH5-SS4	2.3 – 2.9	7	36	46	11
BH6-SS5	3.1 – 3.7	6	34	46	14
BH8-SS4	2.3 – 2.9	3	39	47	11
BH10-SS3	1.5 – 2.1	11	30	49	10

It should be noted that the thickness of native deposit could vary between and beyond the borehole locations within the depth of investigation, and this should be taken into account when estimating.

The native deposit may contain larger particles (cobbles and boulders) that are not specifically identified in the boreholes. The size and distribution of such obstructions cannot be predicted with borings, because the borehole sampler size is insufficient to secure representative samples of the particles of this size. Provision should be made in excavation contracts to allocate risks associated with time spent and equipment utilized to remove or penetrate such obstructions when encountered.

3.2 Groundwater Conditions

During and upon completion of drilling, short-term groundwater was observed at borehole locations BH1 to BH8, ranging from 1.1 m to 2.4 m below the existing ground surface. Monitoring wells were installed at five borehole locations: BH1, BH4, BH6, BH7, and BH10. Groundwater level measurements were made at different times to observe water level fluctuations in the monitoring wells and presented in Table 3.2 of this report. Groundwater levels will continue to be monitored and reported in the Hydrogeological Investigation Report.

Table 3.2: Summary of Groundwater Level Observations in Installed Monitoring Wells

MW ID	Ground Surface Elevation (m)	Borehole Depth (mbgs)	19-June-25		15-Sep-25		15-Dec-25		9- Apr-2026	
			Depth (mbgs)	Elevation (m)	Depth (mbgs)	Elevation (m)	Depth (mbgs)	Elevation (m)	Depth (mbgs)	Elevation (m)
BH1	397.4	6.1	0.65	396.8	2.47	394.9	1.16	396.3	0.26	397.18
BH4	395.4	7.6	2.03	393.4	4.04	391.4	5.52	389.9	0.47	394.65
BH6	390.4	6.1	1.07	389.3	3.24	387.1	1.90	388.5	0.10	390.31
BH7	392.2	6.1	1.27	390.9	3.35	388.8	3.19	389.0	0.22	392.01
BH10	398.7	6.4	1.87	396.9	4.0	394.7	3.80	394.9	0.75	397.99

Based on water table readings obtained between June 19, 2025 & April 9, 2026, the groundwater level varied from 0.10m to 5.52m below the existing ground surface, corresponding to a geodetic elevation of 390.31m to 397.0m.

Groundwater is expected to be encountered during the excavation and installation of foundations below the existing ground surface. Dewatering system will be required to deal with water problems during the construction. Details of dewatering requirement are provided in a hydrogeological investigation report prepared by PLANET.

Perched water may be encountered in excavated areas during wet seasons. A perched water condition can occur due to the accumulation of infiltrated water in the more pervious fill overlying less pervious deposit, or at the interface of fill and native soils, especially during wet periods.

It must be noted that that the ground water levels may fluctuate seasonally based on the amount of precipitation and surface runoff, and wet soils may be encountered to about 0.6 m higher than the water levels noted due to capillary rise in fine cohesionless soils. It should be noted that excavations carried through and below the water bearing cohesionless soils (sand, silt), will experience loosening and sloughing of the sides and unstable excavation base thus requiring relatively flatter excavation slopes.

4 DISCUSSION AND RECOMMENDATIONS

The property is located southeast of 1st line Elora, ON. The subject site is a rectangular-shaped piece of land currently used for agricultural purposes. The land slopes from northwest to southeast, with an elevation difference of approximately 10 m.

Based on the information and updated March 2026 conceptual plan provided by the Client, we understand that the proposed land uses for the Site include approximately 9.33 hectares of low-density residential development (single-detached, semi-detached, and street townhouse units); 1.75 hectares of multiple residential uses; 0.99 hectares of mixed-use development; 2.34 hectares designated for park and trail uses; and 1.99 hectares for a stormwater management (SWM) facility.

PLANET does not have any structural information regarding the proposed development.

The following sections of the report provide our interpretation of the factual geotechnical data obtained during our field evaluation and are intended for the guidance of the design engineer only. Where comments are made on aspects of construction, they are provided only to highlight those aspects which could affect the design of the project. Contractors bidding on or undertaking the work should make their own interpretation of the subsurface information provided as it affects their proposed construction methods, equipment selection, scheduling, safety, and the like. Boreholes BH1 to BH10 were drilled and sampled within the boundary of the proposed development.

4.1 Site Grading

Based on the preliminary information provided by the design engineer, it is our understanding that placement of fill material approximately 2 m to 3m in depth may be required, subject to the final site layout and servicing methodology for the site.

4.1.1 Engineered Fill

PLANET EINGEERING defines “engineered fill” as material that will support foundations, and which is placed and compacted in a specified and controlled manner under full-time supervision of PLANETS geotechnical engineering staff.

In any location where engineered fill will be placed to raise grades or replace poor/weak soil, the topsoil, vegetation, peat, organic sands, or existing earth fill must be fully removed. Full removal of the existing topsoil will generally reveal the shallow dense surface, which is loose to dense, may require limited proof-rolling and should be inspected and approved by the Planet's geotechnical engineer. Exposed native subgrade soil must be proof-rolled and inspected by the geotechnical engineer to ensure all unsuitable material (e.g. organics, weak or soft soil, weathered / disturbed soil, deleterious materials, existing fill) was removed from the engineered fill footprint. Any unsuitable areas must be further sub-excavated and replaced with fill compacted to targeted 100% Standard Proctor Maximum Dry Density (SPMDD), minimum98% SPMDD in building areas and 95% SPMDD in road and servicing areas.

Once the subgrade is approved, engineered fill can be placed. Engineered fill must be placed under the full-time supervision of a geotechnical engineer as required in the Ontario Building Code. The engineered fill may consist of excavated on-site cohesionless soils provided they have been moisture conditioned to a moisture content within 2% of optimum moisture content and do not contain organics, topsoil or deleterious material. It is recommended that any imported soil consist of Granular B (OPSS.MUNI 1010) and be first used in construction areas, with suitable on-site soil used in landscaped or road areas. Excavated disturbed native from the site can be re-used as engineered fill.

In wet soil subgrade areas, the first lift of engineered fill shall consist of 400 mm of Granular B Type II (OPSS.MUNI 1010). This will help to bridge the weaker subgrade and improve the ability to achieve the compaction specifications for subsequent engineered fill lifts. The engineered fill must extend a minimum of 1 m out from all sides of the foundations and extend at a 1 horizontal to 1 vertical slope (1H:1V) down to the exposed subgrade. A typical detail for engineered fill pad dimensioning is included in Appendix C.

4.2 Foundations

Existing topsoil and fill/disturbed native are not suitable for the support of new foundations. The local undisturbed native soil consisted of very loose to very dense sandy silt till to silty sand till with trace to some clay & grave. Typically, the relatively dense native soils were encountered at greater depths below the ground surface.

4.2.1 Footings founded on Native Soils

The proposed structures can be supported by conventional spread and strip footings founded on undisturbed native deposits predominantly silty sand till to sandy silt till for a geotechnical reaction of 75kPa to 200kPa at the Serviceability Limit States (SLS), and for a factored geotechnical resistance of 110kPa to 300kPa at the Ultimate Limit States (ULS). The geotechnical reactions and factored geotechnical resistances including the corresponding highest founding elevations at the borehole locations are summarized on Table 4.1. The recommended founding levels and geotechnical reactions for the proposed structures would need to be confirmed by PLANET at the time of construction. The bearing pressures and the highest founding elevations are given in the following Table 4.1.

Table 4.1: Bearing Values & Founding Levels of Footings on Native Soils

BH No.	Material	Ground Elevation	Geotechnical Reaction at SLS (kPa)	Factored Geotechnical Resistance at ULS (kPa)	Minimum Depth below Existing Grade (m)	Elevation Corresponding to Proposed Footing Base (m)
BH1	Sandy Silt Till to Silty Sand Till	397.4	75	110	1.5	395.9
			200	300	2.5	394.9
BH2	Sandy Silt Till to Silty Sand Till	396.9	75	110	1.5	395.4
			200	300	3.5	393.4
BH3	Sandy Silt Till to Silty Sand Till	396.7	75	110	1.5	395.2
			200	300	2.5	394.2
BH4	Sandy Silt Till to Silty Sand Till	395.4	75	110	1.5	393.9
			200	300	2.5	392.9
BH5	Sandy Silt Till to Silty Sand Till	398.2	75	110	1.2	397.0
			200	300	2.5	395.7
BH6	Sandy Silt Till to Silty Sand Till	390.4	75	110	1.8	388.6
			200	300	2.5	387.9
BH7	Sandy Silt Till to Silty Sand Till	392.2	75	110	0.8	391.4
			200	300	2.5	389.7
BH8	Sandy Silt Till to Silty Sand Till	395.4	75	110	1.5	393.9
			100	150	2.5	392.9
BH9	Sandy Silt Till to Silty Sand Till	396.4	100	150	1.2	395.2
			200	300	2.5	393.9
BH10	Sandy Silt Till to Silty Sand Till	398.7	75	110	1.2	397.5
			200	300	2.5	396.2

4.2.2 Foundation on Engineered Fill

If the foundations are supported on an engineered fill pad as discussed above, the spread or strip footings can be designed using the same geotechnical reaction at SLS and factored geotechnical resistance at ULS as the underlying native soil to a maximum of 100 kPa at SLS and 150 kPa at ULS.

It is recommended that nominal reinforcing steel for stiffening of the foundation walls made on engineered fill be provided to help mitigate minor cracking due to minor differential settlement. The reinforcing steel in the poured concrete foundation walls may consist of 2-15Mbars continuous at the top of the foundation wall, and 2-15M bars continuous at the bottom of the foundation walls. Typically, these bars are placed 100 to 200 mm from the top or bottom of the foundation wall, respectively. The reinforcing steel should extend a minimum of 3 m past any transition zones between engineered fill and native soil. A typical reinforcing steel detail for foundation walls placed on engineered fill (refer to attached Drawing 6). The recommended nominal reinforcing steel should not be considered a structural design. The need for different or additional reinforcement should be reviewed by a structural engineer to ensure the original structural design intent of the structure is maintained.

To confirm the quality and uniformity of the engineered fill, it is recommended that Cone Penetration Testing (CPT) be performed at selected locations after fill placement. CPT will help identify any weak or poorly compacted zones that may affect future construction. For areas designated for proposed construction, CPT results will also ensure the compacted engineered fill is suitable for proposed construction. This verification will help minimize settlement risks and support long-term performance of the proposed development.

4.2.3 Other Comments on Foundations

Variations in the soil conditions are expected in between the borehole locations, and during construction, the soil bearing pressures should be confirmed by the Geotechnical Engineer.

To comply with the Township’s design standards (Section H.6), a minimum vertical separation of 0.30 m shall be maintained between the underside of footings and the seasonally high groundwater elevation.

Prior to pouring foundation concrete, the foundation subgrade should be cleaned of all deleterious materials such as topsoil, fill, wet, softened, disturbed or caved materials, as well as any standing water. If construction proceeds during freezing weather conditions, adequate temporary frost protection for the foundation subgrade and concrete must be provided.

It is noted that native soils tend to weather rapidly and deteriorate on exposure to the atmosphere or surface water. Hence, foundation bases which remain open for an extended period of time should be protected by a skim coat of lean concrete.

Footings designed to the specified bearing capacity at the serviceability limit states (SLS) are expected to settle less than 25 mm total and 19 mm differential.

In the vicinity of the existing buried utilities, footings must be lowered to undisturbed native soils, or alternatively the services must be structurally bridged.

Where it is necessary to place footings at different levels, the upper footing must be founded below an imaginary 10 horizontal to 7 vertical line drawn up from the base of the lower footing. The lower footing must be installed first to help minimize the risk of undermining the upper footing. Footings close to underground services should also be set back from the services based on this slope limitation as shown in the following Figure 1.

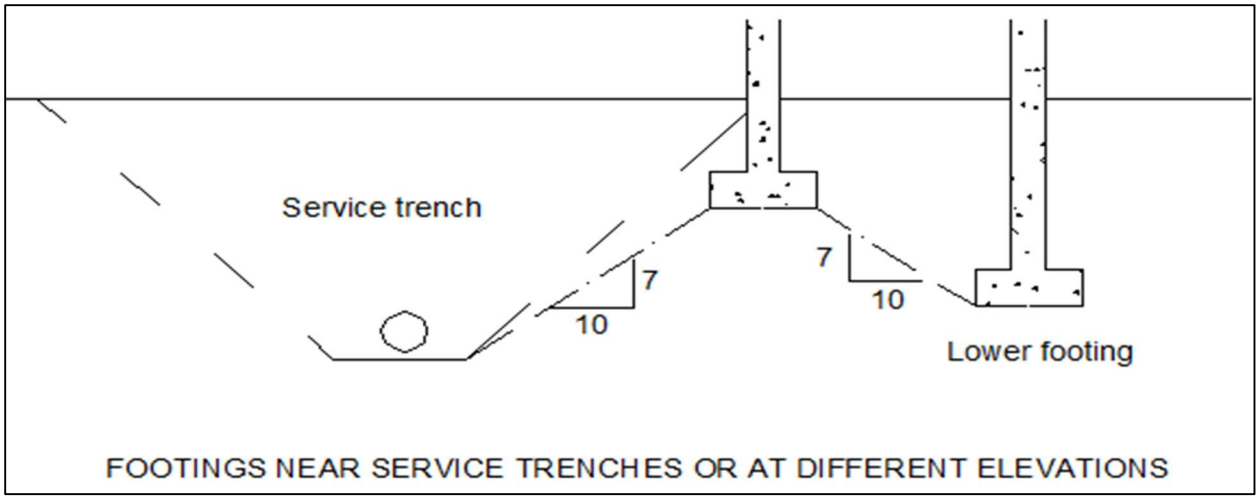

Figure 1: Footings near service trenches or at different elevations

During winter construction, foundations and slab (if applicable) on grade must not be poured on frozen soil. Foundations must be adequately protected at all times from cold weather and freezing conditions.

Design frost protection depth for the general area is 1.2m. Therefore, for frost protection, new footings should have a permanent earth cover of at least 1.2m or be provided with an equivalent thickness of extruded rigid exterior-grade polystyrene insulation. In case of rip-rap (rock fill), only one-half of the rock fill thickness should be assumed to be effective in providing frost protection.

The recommended bearing capacities and the corresponding founding elevations would need to be confirmed by the representative of PLANET during construction. It should be noted that the recommended bearing capacities have been calculated by PLANET from the borehole information for the design stage only. The investigation and comments are necessarily on-going as new information of the underground conditions becomes available. For example, more specific information is available with respect to conditions between boreholes when foundation construction is underway. The interpretation between boreholes and the recommendations of this report must therefore be checked through field inspections provided by PLANET to validate the information for use during the construction stage. In this regard, PLANET should be retained for a general review of the final design and specifications to verify that this report has been properly interpreted and implemented. If not accorded the privilege of making this review, PLANET will assume no responsibility for interpretation of the recommendations in the report.

4.3 Storm Water Management Pond Construction

For the proposed future storm water management pond construction, it is recommended that the pond base and side slopes be prepared with a well-compacted, low-permeability liner, such as compacted clay or a suitable synthetic membrane, to minimize seepage and protect groundwater resources. The subgrade should be inspected and approved by PLANET prior to liner installation to ensure it is smooth, uniformly compacted, and free of sharp objects or debris that could damage the liner. Where site soils are not naturally low in permeability, a constructed liner (approved compacted clay) of at least 600 mm thickness is advised. Continuous monitoring during construction is recommended to confirm that the liner meets the specified design criteria and provides long-term performance for the pond.

4.4 Floor Slab and Permanent Drainage

Based on the anticipated lowest basement level (2.5m below existing grade), the basement slab subgrade is expected to consist of generally dense to very dense non cohesive soils. The slab subgrade should be assessed by a geotechnical engineer and disturbed/soft/wet subgrade areas should be sub excavated and replaced with imported Granular A and/or Granular B Type 2. The imported granular material must meet the specifications defined in OPSS-1010-13. The existing fill free from topsoil and organics may be used to raise the grade, provided it is confirmed by a qualified geotechnical professional from PLANET Engineering inc at the time construction. The fill required to raise the grade must be placed in shallow lifts (each lift not more than 200 mm) and compacted to at least 98 percent of Standard Proctor Maximum Dry Density (SPMDD).

It is necessary that the basement floor slab be provided with a capillary moisture barrier and drainage layer. This is provided by placing the slab on a minimum layer of 19 mm clear stone (OPSS 1004) compacted by vibration to a compact state. Regardless of the approach to slab construction, the floor slabs that are to have bonded floor finishes (such as tiles with adhesives) should be provided with a capillary moisture and vapour barrier. The floor manufacturers have specific requirements for vapor barrier; therefore, the floor designer/architect must ensure that a provision of appropriate vapour barrier conforming to specific floor finish product requirements is incorporated in the project specifications. Adequate testing must be carried out to ensure acceptable levels of moisture/relative humidity in the concrete slab prior to the installation of floor finish(es). Studies indicate that a provision of 200 mm thick 19 mm clearstone base (OPSS 1004) under the slab helps provide a good capillary moisture break provided the granular base is positively drained. However, this provision does not replace the floor manufacturers' specific requirement(s) for a vapour barrier.

The estimated modulus of subgrade reaction (ks) equal to 20 MN/m^3 may be used for the design of slab-on-grade supported on native or structural fill soils, provided that the construction is in accordance with the recommendations provided herein. If structural fill (Granular A or B Type II) having minimum thickness of 300 mm, this value can be increased to 30 MN/m^3. The estimated value provided above may need to be adjusted based on the structure size and locations of detail design.

The floor slabs should not be tied to any load-bearing walls or columns unless they have been designed accordingly. Contraction/expansion joints should be provided for the slabs as required by the structural engineer.

To assist in maintaining a dry basement from seepage, it is recommended that exterior grades around the building be sloped away at a 2 percent gradient or more, for a distance of at least 1.2 m. A perimeter drainage system is provided by forming a drained cavity with prefabricated drain core material such as Miredrain 2000 (Mirafi) or Terradrain 20 (Terrafix). The composite drainage board then discharge to the drainage layer beneath the lowest floor slab through ports made in the foundation wall above the footing level. A conceptual perimeter drainage is shown on Drawing 3.

The perimeter should outlet to a suitable discharge point under gravity flow or connected to a sump pit(s) located in the lowest level of the basement, and the water be pumped up to a suitable discharge point. The size of the sump should be adequate to accommodate anticipated water seepage. A duplex pumping arrangement (main pump with a provision of a backup pump) on emergency backup power is recommended.

4.5 Frost Susceptibility of Soils

The frost depth penetration in this area is considered to be 1.2m. Based on the grain size analysis and using the Ministry of Transportation (MTO) category for frost susceptibility soils, the on-site fill/disturbed native soils would be classified as moderate susceptible to frost heaving.

4.6 Excavations and Backfill

It is anticipated that the existing grade will be raised by approximately 2 to 3 m across the site. Excavations within the engineered fill used to raise the grade can be carried out using a heavy hydraulic backhoe. Considering the footings to be placed at minimum frost level, it is anticipated that the excavation will be extended to about 1.2m below the existing grade. Based on the borehole information, Groundwater problems are anticipated for the installation of foundations below the existing ground surface. Any seepage, which may occur during wet periods through fill, can be removed by conventional pumping from sumps for excavation.

All excavations must be carried out in accordance with the most recent Occupational Health and Safety Act (OHSA). As a general rule, the excavations in Type 1 and 2 soils can be carried out without support using side slopes 1H:1V, while the bottom 1.2m of the excavation can be cut vertically and could retain the wall for a short period of time. The excavation in Type 3 soil can be carried out maintaining the side slopes not steeper than 1H:1V. The excavations in Type 4 soils will require minimum flatter side slopes of 3H to 1V. These slopes should be visually monitored for any movement especially if workers are present within the excavation. These temporary slopes should only be utilized for a short duration. If an excavation contains more than one type of soil, the soil shall be classified as the type with the highest number among the types present.

The existing native soil (free of topsoil) can be used as general construction backfill where it can be adequately compacted with suitable type compactors. Loose lifts of soil, which are to be compacted, should not exceed 200 mm. Noted that the excavated soils are subject to moisture content increase during wet weather which would make these materials too wet for adequate compaction. Stockpiles should therefore be compacted at the surface or be covered with tarpaulins to help minimize moisture intake.

Imported granular fill, which can be compacted with handheld equipment, should be used in confined areas. The excavated soils are not considered to be free draining. Where free draining backfill is required, imported granular fill such as OPSS Granular B should be used.

Stockpiles should be placed well away from the edge of excavation and their height should be controlled so that they do not surcharge the sides of the excavation. Surface drainage should be controlled to prevent flow of surface water into the excavations. Excavation safety and stability of temporary construction slopes and lateral support systems are the contractor’s responsibility.

During winter construction, concrete and/or fill must not be placed on frozen fill or soil. Subgrades and foundations must be placed adequately protected at all times from cold weather and freezing conditions. Consideration should be given to install a skim coat of lean concrete (mud-slab) to preserve the subgrade integrity, and to provide a working platform.

4.7 Earth Pressures

The lateral earth pressures acting on retaining walls or underground structures may be calculated from the following expression:

$$p = K(\gamma h + q)$$

where p	=	Lateral earth pressure in kPa acting at depth h
K	=	Earth pressure coefficient equal to 0.4 for vertical walls and horizontal Granular B backfill used for permanent construction. Water pressure must be considered, if continuous wall drains are not used.
γ	=	Unit weight of backfill, a value of 20.5 kN/m^3 may be assumed
h	=	Depth to point of interest in meters
q	=	Equivalent value of surcharge on the ground surface in kPa

The above expression assumes that the perimeter drainage system prevents the build up of any hydrostatic pressure behind the wall.

4.8 Earthquake Considerations

Based on the borehole information and according to Table 4.1.8.4.A of OBC 2024, the subject site for the proposed structure can be classified as Class 'D' for seismic site response. Consideration could be given to conduct an earthquake site assessment with the use of in-situ testing of the seismic characteristics (i.e., Geophysical testing – Multi-channel Analysis of Surface Waves-MASW) which can lead to an improved site classification (i.e., from Class D to Class C).

4.9 Underground Utility Trenches

As a part of the site development, a network of utility trenches may be required.

4.9.1 Trenching

It is expected that in most cases the trenches will be excavated through compacted engineered fill and/or loose to compact non cohesive native soils.

Groundwater is anticipated to be a major problem for excavating utility trenches. Any cut below the groundwater level will require dewatering. Otherwise, it will result in an unstable excavation base and flowing sides. The groundwater table must be lowered one meter below the lowest excavation level. The test pit should be carried out in this area before the excavation to further explore the groundwater and seepage conditions. In accordance with OHSA, on-site fill and the undisturbed native soils above the groundwater table can be classified as Type 3 soils. sandy silt below the groundwater table can be classified as Type 2.

4.9.2 Bedding

The undisturbed native deposits or engineered fill will provide adequate support for the utility pipes and allow the use of normal Class B type bedding.

The recommended minimum thickness of granular bedding below the invert of the pipes is 150 mm. The thickness of the bedding may, however, have to be increased depending on the pipe diameter or in accordance with local standards or if wet or weak subgrade conditions such are encountered, especially when the soil at the trench base level consists of wet, dilatant silts, sandy silts. The bedding material should consist of well graded granular material such as Granular 'A' or equivalent. After installing the pipe on the bedding, a granular surround of approved bedding material, which extends at least 300 mm above the obvert of the pipe, or as set out by the local authority, should be placed.

To avoid the loss of soil fines from the subgrade, uniformly graded clear stone should not be used unless, below the granular bedding material, a suitable, approved filter fabric (geotextile) is placed. The geotextile should extend along the sides of the trench and should be wrapped all around the poorly graded bedding material.

4.9.3 Thrust Blocks

Pressurized fluids in buried pipelines generate unbalanced, thrust forces at bends, junctions, valves pump starts or stops, valve closures, air vents and all restrictions to, and changes in direction of flows. Generally, the thrust forces depend on the internal pressure, the cross-sectional area of the pipe and the deflection angle. For pipes which are not anchored, the unbalanced thrust forces must be resisted either by thrust blocks and collars or by thrust restraint systems or a combination of both.

Thrust blocks are passive systems which prevent the pipe joint leaking by blocking the pipe movements and the separation of unrestrained joints. Depending on the source of the thrust force, their resistance comes either from the mobilization of soil bearing capacity or dead weight: the bearing type thrust blocks resist thrust forces corresponding to concave vertical and horizontal bends, while the gravity ones secure the convex vertical bends. Because they need to immobilize the pipes, the allowable soil stresses must be considerably smaller than those required to cause ultimate failure of the thrust block itself. The thrust block design is satisfactory if the design force, F_d, is less than the ultimate resistance R_{ult}, reduced by a suitable reduction (safety) factor which will ensure that the displacements will be relatively small.

Values for thrust reduction factors for thrust blocks are given in Table 4.3 for different soil and rock types.

If these lead to unacceptably large thrust blocks, the reduction factor may be re-assessed by determining he actual relationship between thrust reduction factor and displacement under defined load and ground conditions.

Table 4.2: Reduction Factors for Thrust Blocks

Soil or Rock Type	Reduction Factor (T_r)
Dense sandy deposit/stiff to very stiff clayey silt	2 to 3
Compact sandy deposit/firm clayey silt	3 to 4
Very loose to loose sandy deposit/soft clayey silt	4 to 5

Thrust blocks normally consist of a volume of concrete, usually of nominal strength (20-40 MPa), which may be lightly reinforced. The size and shape of the block is decided on the basis of the forces to be restrained, the size and style of the pipe fitting or component, and local ground conditions. The effectiveness of any thrust block is determined by its mass, shape, position relative to the pipeline, the soil reactions on the block, and friction between the pipeline and the surrounding ground.

Thrust blocks for the underground services under pressure may be constructed in native soils in areas here there is no risk of future excavations. The back of the thrust blocks should be vertical and should be cast directly against undisturbed natural soils. The ultimate lateral resistance of thrust blocks can be calculated in accordance with Drawing 5.

Thrust restraint systems are alternative to thrust blocks. They are active systems in the sense that they rely on the mobilization of pipe/soil friction and/or passive resistance in the soil for a sufficient length away from the junction. The length of pipeline required to develop the resisting force crucially depends on the type of junction, pipeline material, type and compaction/consistency of the backfill, etc.

4.9.4 Backfilling of Trenches

The existing fill (free of topsoil) and native soils can be used as general construction backfill where it can be adequately compacted with suitable type compactors.

The backfill material should be placed in maximum 200 mm thick layers at or near (±2%) of the optimum water content and each layer should be compacted to at least 95% SPMDD to within 1.5 m to final subgrade. In the upper 1 m, the degree of compaction should be minimum 98% SPMDD, except for landscape area. Unsuitable materials such as organic soils, boulders, cobbles, frozen soils, etc. should not be used for backfilling.

The on-site excavated soils should not be used in confined areas (e.g. around catch basins and laterals under roadways) where heavy compaction equipment cannot be operated. The use of imported granular fill together with an appropriate frost taper would be preferable in confined areas and around structures, such as catch basins.

4.10 Pavements

The pavement structures presented in Table 4.3 can be used for the design of proposed parking areas and access roadways during construction under ideal or non-ideal subgrade conditions.

The explored fill/disturbed native generally extended not more than 1.1 m in the boreholes. The subgrade is expected to consist of organic materials and/or native soils depending upon the proposed grades of parking structure. The zone of influence of the pavement subgrade is generally estimated within 1 m below the underside of the granular sub-base.

4.10.1 Ideal Conditions

Under ideal conditions, the zone of the pavement subgrade within 1 m below the underside of the granular sub-base must be compacted to at least 95% of its Standard Proctor Maximum Dry Density (SPMDD) with moisture content 2 to 3% drier than its optimum and then the compaction should be increased to 98% of SPMDD in the upper 0.6 m of the subgrade.

4.10.2 Non-Ideal Conditions

If the roads are to be constructed during the wet seasons and if the subgrade is unsuitable then either the top 1.1m of the subgrade should be replaced with drier, compacted, select subgrade material meeting as OPSS 1010 or the top 0.8 m of the subgrade should be replaced with granular material meeting the specifications defined in OPSS-1010-13. This will be assessed at the time of access roadways construction and parking area.

The existing fill/disturbed native within 1.1 m from the underside of sub-base must be excavated and assessed its stability and suitability according to ideal/non-ideal conditions criteria stipulated by the local authority having jurisdiction over the project site. Depending upon evaluation either the excavated material will be re-used or if found to be unsuitable replaced with select subgrade/granular materials.

In preparation of the subgrade, prior to placement of the granular sub-base and base materials, the subgrade must be proof-rolled to determine its stability and suitability for access road construction and parking area by a qualified geotechnical professional.

The recommended pavement structures provided in Table 4.3 are based upon an estimate of the subgrade soil properties determined from visual examination and textural classification of the soil samples. Consequently, the recommended pavement structures should be considered for preliminary design

purposes only. A functional design life of eight to ten years has been used to establish the pavement recommendations. This represents the number of years to the first rehabilitation, assuming regular maintenance is carried out. If required, a more refined pavement structure design can be performed based on specific traffic data and design life requirements and will involve specific laboratory tests to determine frost susceptibility and strength characteristics of the subgrade soils, as well as specific data input from the client.

Table 4.3: Recommended Pavement Structure Thickness

Pavement Layer	Compaction Requirements	Light Duty Parking (Cars)	Heavy Duty Parking (Delivery Trucks)
Asphaltic Concrete	92 to 96.5% Maximum Relative Density	40 mm OPSS HL 3 40 mm OPSS HL 8	50 mm OPSS HL 3 75 mm OPSS HL 8
OPSS/TS 1010 Granular A Base** (or 20mm Crushed Limestone)	100% SPMDD*	150 mm	150 mm
OPSS/TS 1010 Granular B Type I or approved equivalent***	100% SPMDD	200 mm	350 mm

* Denotes Standard Proctor Maximum Dry Density, ASTM-D698

** As per TS1010 recycled concrete materials are not acceptable for base material as replacement of granular A.

***An additional thickness of 50mm will be added for sub-base, if recycled concrete materials will be used as granular B.

The subgrade must be compacted to 98% SPMDD for at least the upper 300 mm unless accepted by PLANET.

The long-term performance of the pavement structure is highly dependent upon the subgrade support conditions. Stringent construction control procedures should be maintained to ensure uniform subgrade moisture and density conditions are achieved.

Alternatively, consideration should be given to the use of rigid Portland Cement Concrete pavement where there is intense truck use, parking and turning of vehicles. The following Table 4.4 provides the minimum recommended rigid pavement structure.

Table 4.4: Minimum Rigid Concrete Pavement Structure

Pavement Layer	Compaction Requirements	Heavy Duty Pavement
Portland Cement Concrete (CAN3-CSA A23.1) - Class C-2	CAN3-CSA A23.1	225 mm
Base Course: Granular A (OPSS 1010) or 19 mm Crusher Run Limestone	100% Standard Proctor Maximum Dry Density (ASTM-D698)	150 mm

It must be noted that this structure does not provide full protection of the subgrade from frost penetration; therefore, the pavement slabs must be separated from the building structure.

Control of surface water is an important factor in achieving a good pavement life. The need for adequate subgrade drainage cannot be over-emphasized. The subgrade must be free of depressions and sloped (preferably at a minimum grade of two percent) to provide effective drainage toward subgrade drains. Grading adjacent to the pavement areas should be designed to ensure that water is not allowed to pond adjacent to the outside edges of the pavement. Continuous pavement subdrains should be provided along

both sides of the driveway/access routes and drained into respective catch basins to facilitate drainage of the subgrade and granular materials. The subdrain invert should be maintained at least 0.3 m below subgrade level. Subdrains should also be provided at all catch basins within the parking area.

Concrete should be proportioned, mixed, placed and cured in accordance with the requirements of CSA Standard CAN/CSA-A23.1-14 for class C-2 exposure, with the following key requirements:

minimum 28-day compressive strength:	32 MPa
air entrainment:	5 to 8 %
maximum water/cementing material ratio:	0.45

Concrete should be placed and spread in a manner which avoids segregation. It should be consolidated with a vibratory screed or internal vibrators. Consolidation close to form edges must be given special consideration.

Concrete should be finished to a thickness tolerance of 0 to plus 10 mm. Concrete must be cured adequately to provide durability and strength. Curing can be accomplished by wet blankets, sprinkling, plastic sheets and curing compounds. Curing should begin immediately after loss of bleed water.

Concrete pavement should be provided with joints to control stresses and prevent the formation of irregular cracks. Recommended joint spacing is 24 to 30 times slab thickness to a maximum dimension of about 4.0m. We would also recommend that load transfer dowels be placed at 50 mm spacing at the joints.

Sawed joints should be cut before random cracking occurs in the slab, usually within 6 to 18 hours after concrete placement. The maximum thickness (aperture) of control joints should be 6 mm, while the depth of control joints should be about 1/4th of the slab thickness.

The pavement should be closed to traffic until a minimum flexural strength of 2 MPa is attained or an approximate compressive strength of 20 MPa. This minimum strength is generally reached when the concrete can be saw cut without ravelling.

Additional comments on the construction of parking areas and access roadways are as follows:

1. Removal of all fill for pavement is not necessary. As part of the subgrade preparation, proposed parking areas and access roadways should be stripped fill at least in the upper 0.8 m below subgrade and surficially softened native soils and the base then should be thoroughly proof rolled by using a loaded truck. Unstable areas or areas with excessive organic materials should be further sub-excavated. The fill required to raise the grade can consist of inorganic soil, placed in shallow lifts and compacted to minimum 98 percent of Standard Proctor Maximum Dry Density (SPMDD).

2. The locations and extent of sub-drainage required within the paved areas should be reviewed by this office in conjunction with the proposed lot grading. Assuming that satisfactory crossfalls in the order of two percent have been provided, subdrains extending from and between catch basins may be satisfactory. In the event that shallower crossfalls are considered, a more extensive system of sub-drainage may be necessary and should be reviewed by PLANET.

3. The above pavement structure considers that construction will be carried out during the dry period of the year. If the subgrade becomes excessively wet or rutted during construction activities, additional sub-base material or placement of geogrids may be required. The need for additional sub-base material and/or placement of geogrids including filter fabric to stabilize the base is best determined during construction. It is recommended that the existing subgrade be heavily proof-

rolled prior to placement and any areas showing excessive deflection be replaced prior to placing the granular sub-base material.

4. It is recommended that PLANET be retained to review the final pavement structure designs and drainage plans prior to construction to ensure that they are consistent with the recommendations.

4.10.3 Stripping, Sub-excavation and Grading

The final subgrade should be cambered or otherwise shaped properly to facilitate rapid drainage and to prevent the formation of local depressions in which water could accumulate.

Owing to the clayey (i.e. impervious) nature of the subsoil at some locations of the site, proper cambering and allowing the water to escape towards the sides (where it can be removed by means of subdrains) is considered to be beneficial for this project. Otherwise, any water collected in the granular sub-base materials could be trapped thus causing problems due to softened subgrade, differential frost heave, etc. For the same reason damaging the subgrade during and after placement of the granular materials by heavy construction traffic should be avoided. If the moisture content of the local material cannot be maintained at ±2% of the optimum moisture content, imported granular material may need to be used.

Any fill required for regarding the site or backfill should be select, clean material, free of topsoil, organic or other foreign and unsuitable matter. The fill should be placed in thin layers and compacted to at least 95% of its SPMDD. The degree of compaction should be increased to 98% within the top 1.0 m of the subgrade, or as per Region Standards. The compaction of the new fill should be checked by frequent field density tests.

4.10.4 Construction

Once the subgrade has been inspected and approved, the granular base and sub-base course materials should be placed in layers not exceeding 200 mm (uncompacted thickness) and should be compacted to at least 100% of their respective SPMDD. The grading of the material should conform to current OPS Specifications.

The placing, spreading and rolling of the asphalt should be in accordance with OPS Specifications or, as required by the local authorities.

Frequent field density tests should be carried out on both the asphalt and granular base and sub-base materials to ensure that the required degree of compaction is achieved.

4.10.5 Drainage

All paved surfaces should be sloped to provide satisfactory drainage towards catch basins. Installation of full-length subdrains on all roads is recommended. The subdrains should be properly filtered to prevent the loss of (and clogging by) soil fines.

4.11 Engineered Fill and Sub-Excavation

Detailed site grading plans for the proposed development were not available to us at the time of preparation of this report. However, based on the existing topography at the site, cut and fill operations are expected to require as part of the proposed development.

In the areas where earth fill is required for site grading purposes, engineered fill can be used and similarly, if the area under consideration need to be raised, engineered fill can be used.

Prior to the placement of the engineered fill, all of the existing fill, the loose possible fill/disturbed soil, and surficial softened native soils must be removed, and the exposed surface proof rolled. Any soft spots revealed during proof rolling must be sub-excavated and re-engineered. The depths of sub-excavation required for the construction of engineered fill will be assessed by a geotechnical professional at the time of excavation.

General guidelines for the placement and preparation of engineered fill are presented on Appendix C. A geotechnical reaction of 100 kPa (2000 psf) at the Serviceability Limit States (SLS) and factored geotechnical resistances of 150 kPa at the Ultimate Limit States (ULS) can be used on engineered fill, provided that all requirements on Appendix “C” are adhered to. To reduce the risk of improperly placed engineered compacted fill, full-time supervision of the contractor is essential. Despite full time supervision, it has been found that contractors frequently bulldoze loose fill into areas and compact only the surface. The inspector, either busy on other portions of the site or absent during “off hours” will be unaware of this condition. For this reason, we cannot guarantee the performance of the engineered fill, and this guarantee must be the responsibility of the contractor. The owner and his representatives must accept the risk involved in the use of engineered fill and offset this risk with the monetary savings of avoiding deep foundations/soil improvement. This potential problem must be recognized and discussed at a pre-construction meeting. Procedures can then be instigated to reduce the risk of settlement resulting from un-compacted fill.

The following is a recommended procedure for engineered fill:

1. Prior to site work involving engineered fill, a site meeting to discuss all aspects must be convened. The surveyor, contractor, design engineer and geotechnical engineer must attend the meeting. At this meeting, the limits of the engineered fill will be defined. The contractor must make known where all fill material will be obtained, and samples must be provided to the geotechnical engineer for review, and approval before filling begins.
2. Detailed drawings indicating the lower boundaries as well as the upper boundaries of the engineered fill must be available at the site meeting and be approved by the geotechnical engineer.
3. The building footprint and base of the pad, including basements, garages (if applicable), etc. must be defined by offset stakes that remain in place until the footings and service connections are all constructed. Confirmation that the footings are within the pad, service lines are in place, and that the grade conforms to drawings, must be obtained by the owner in writing from the surveyor and PLANET Engineering Inc. Without this confirmation no responsibility for the performance of the structure can be accepted by PLANET Engineering Inc. Survey drawing of the pre and post fill location and elevations will also be required.
4. The area must be stripped of all topsoil and fill materials. Subgrade must be proof rolled. Soft spots must be dug out. The stripped native subgrade must be examined and approved by PLANET Engineering Inc engineer prior to placement of fill.
5. The approved engineered fill must be compacted to 100% Standard Proctor Maximum Dry Density throughout. Granular Fill preferred. Engineered fill should not be placed (where it will support footings) during the winter months. Engineered fill compacted to 100% SPMDD will settle under its own weight approximately 0.5% of the fill height and the structural engineer must be aware of this settlement. In addition to the settlement of the fill, additional settlement due to consolidation of the underlying soils from the structural and fill loads will occur.
6. Full-time geotechnical inspection by PLANET Engineering Inc during placement of engineered fill is required. Work cannot commence or continue without the presence of the PLANET representative.
7. The fill must be placed such that the specified geometry is achieved. Refer to sketches for minimum requirements. Take careful note that the projection of the compacted pad beyond the footing at

footing level is a minimum of 2 m. The base of the compacted pad extends 2 m plus the depth of excavation beyond the edge of the footing.

8. A geotechnical reaction of 100 kPa (2000) may be used provided that all conditions outlined above are adhered to. A minimum footing width of 500 mm (20 inches) is suggested, and footings should be provided with nominal steel reinforcement.

9. All excavations must be done in accordance with the Occupational Health and Safety Regulations of Ontario.

10. After completion of the pad a second contractor may be selected to install footings. All excavations must be backfilled under full time supervision by PLANET to the same degree as the engineered fill pad. Surface water cannot be allowed to pond in excavations or to be trapped in clear stone backfill. Clear stone backfill can only be used with the approval of PLANET.

11. After completion of compaction, the surface of the pad must be protected from disturbance from traffic, rain and frost.

12. If there is a delay in construction, the engineered fill pad must be inspected and accepted by the geotechnical engineer. The location of the structure must be reconfirmed that it remains within the pad.

4.12 Geotechnical Review

It is recommended that the project design drawings be submitted to PLANET for review for compatibility with site subsurface conditions and the recommendations contained in this report.

5 GENERAL COMMENTS

The recommended bearing capacities (Geotechnical Reaction) and the corresponding founding elevations would need to be confirmed by the representative of PLANET during construction. It should be noted that the recommended bearing capacities have been calculated by PLANET from the borehole information for the design stage only. The investigation and comments are necessarily on-going as new information of the underground conditions becomes available. For example, more specific information is available with respect to conditions between boreholes when foundation construction is underway. The interpretation between boreholes and the recommendations of this report must therefore be checked through field inspections provided by PLANET to validate the information for use during the construction.

In this regard, PLANET should be retained for a general review of the final design and specifications to verify that this report has been properly interpreted and implemented. If not accorded the privilege of making this review, PLANET will assume no responsibility for interpretation of the recommendations in the report.

The comments given in this report are intended only for the guidance of design engineers. The number of boreholes required to determine the localized underground conditions between boreholes affecting construction costs, techniques, sequencing, equipment, scheduling, etc., would be much greater than has been carried out for design purposes. Contractors bidding on or undertaking the works should, in this light, decide on their own investigations, as well as their own interpretations of the factual borehole results, so that they may draw their own conclusions as to how the subsurface conditions may affect them.

The information in this report in no way reflects on any of the environmental aspects of the soil condition at the site and has not been specifically addressed in this report, since this aspect was beyond the scope and terms of reference.

We trust that the information contained in this report is satisfactory. Should you have any questions, please do not hesitate to contact this office.

For and on behalf of PLANET Engineering Inc

Haseeb Hasan, M.Eng., PMP
Project Manager



Irfan Ahmad Khokhar, Ph.D., P.Eng., Consulting Engineer
Principal Geotechnical Engineer

DRAWINGS



SITE LOCATION PLAN

Drawn By: HH	Project: **GEOTECHNICAL INVESTIGATION REPORT FOR PROPOSED DEVELOPMENT AT 127 1ST LINE, ELORA, TOWNSHIP OF CENTRAL WELLINGTON, ONTARIO**	Date: June 23, 2025
Approved By: IK		Project No: 2501179BG
PLANET ENGINEERING Inc. Consulting Engineers	Client: **Elora Greens Inc.**	Drawing No 1

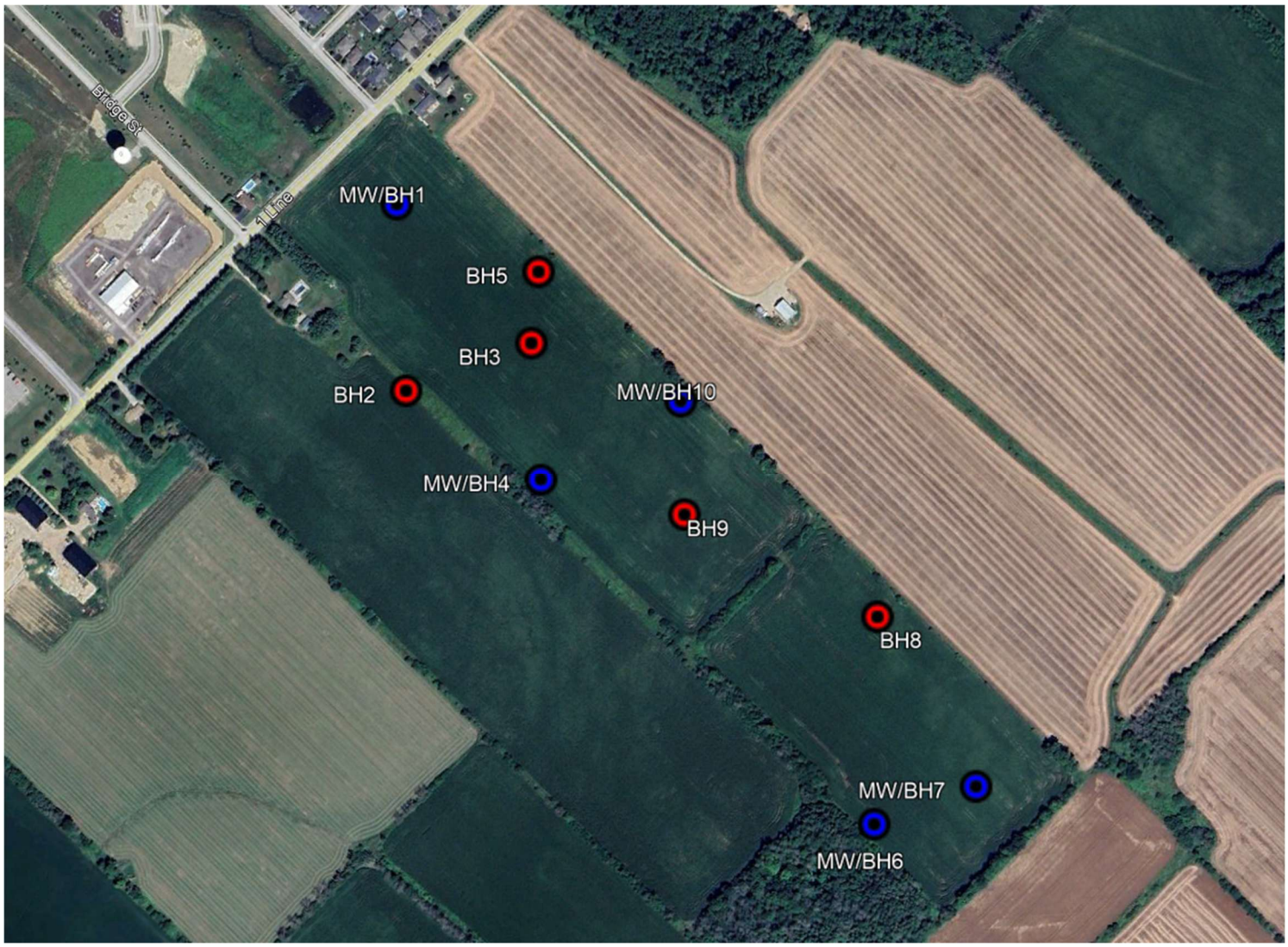

BOREHOLE LOCATION PLAN

Drawn By: HH	Project: **GEOTECHNICAL INVESTIGATION REPORT** **FOR PROPOSED DEVELOPMENT AT 127 1ST LINE, ELORA,** **TOWNSHIP OF CENTRAL WELLINGTON, ONTARIO**	Date: June 23, 2025
Approved By: IK		Project No: 2501179BG
PLANET ENGINEERING Inc. Consulting Engineers	Client: **Elora Greens Inc.**	Drawing No 1A

Drawing 1B: Notes on Sample Descriptions

1. All sample descriptions included in this report follow the Canadian Foundations Engineering Manual soil classification system. This system follows the standard proposed by the International Society for Soil Mechanics and Foundation Engineering. Laboratory grain size analyses provided by PLANET Engineering Inc also follow the same system. Different classification systems may be used by others; one such system is the Unified Soil Classification. Please note that, with the exception of those samples where a grain size analysis has been made, all samples are classified visually. Visual classification is not sufficiently accurate to provide exact grain sizing or precise differentiation between size classification systems.

ISSMFE SOIL CLASSIFICATION

CLAY	SILT			SAND			GRAVEL			COBBLES	BOULDERS
	FINE	MEDIUM	COARSE	FINE	MEDIUM	COARSE	FINE	MEDIUM	COARSE		

0.002 0.006 0.02 0.06 0.2 0.6 2.0 6.0 20 60 200

EQUIVALENT GRAIN DIAMETER IN MILLIMETRES

CLAY (PLASTIC) TO	FINE	MEDIUM	CRS.	FINE	COARSE
SILT (NONPLASTIC)	SAND			GRAVEL	

UNIFIED SOIL CLASSIFICATION

2. Fill: Where fill is designated on the borehole log it is defined as indicated by the sample recovered during the boring process. The reader is cautioned that fills are heterogeneous in nature and variable in density or degree of compaction. The borehole description may therefore not be applicable as a general description of site fill materials. All fills should be expected to contain obstruction such as wood, large concrete pieces or subsurface basements, floors, tanks, etc.; none of these may have been encountered in the boreholes. Since boreholes cannot accurately define the contents of the fill, test pits are recommended to provide supplementary information. Despite the use of test pits, the heterogeneous nature of fill will leave some ambiguity as to the exact composition of the fill. Most fills contain pockets, seams, or layers of organically contaminated soil. This organic material can result in the generation of methane gas and/or significant ongoing and future settlements. Fill at this site may have been monitored for the presence of methane gas and, if so, the results are given on the borehole logs. The monitoring process does not indicate the volume of gas that can be potentially generated nor does it pinpoint the source of the gas. These readings are to advice of the presence of gas only, and a detailed study is recommended for sites where any explosive gas/methane is detected. Some fill material may be contaminated by toxic/hazardous waste that renders it unacceptable for deposition in any but designated land fill sites; unless specifically stated the fill on this site has not been tested for contaminants that may be considered toxic or hazardous. This testing and a potential hazard study can be undertaken if requested. In most residential/commercial areas undergoing reconstruction, buried oil tanks are common and are generally not detected in a conventional geotechnical site investigation.

3. Till: The term till on the borehole logs indicates that the material originates from a geological process associated with glaciation. Because of this geological process the till must be considered heterogeneous in composition and as such may contain pockets and/or seams of material such as sand, gravel, silt or clay. Till often contains cobbles (60 to 200 mm) or boulders (over 200 mm). Contractors may therefore encounter cobbles and boulders during excavation, even if they are not indicated by the borings. It should be appreciated that normal sampling equipment cannot differentiate the size or type of any obstruction. Because of the horizontal and vertical variability of till, the sample description may be applicable to a very limited zone; caution is therefore essential when dealing with sensitive excavations or dewatering programs in till materials.

UNIFIED SOIL CLASSIFICATION SYSTEM LS 702/D 422

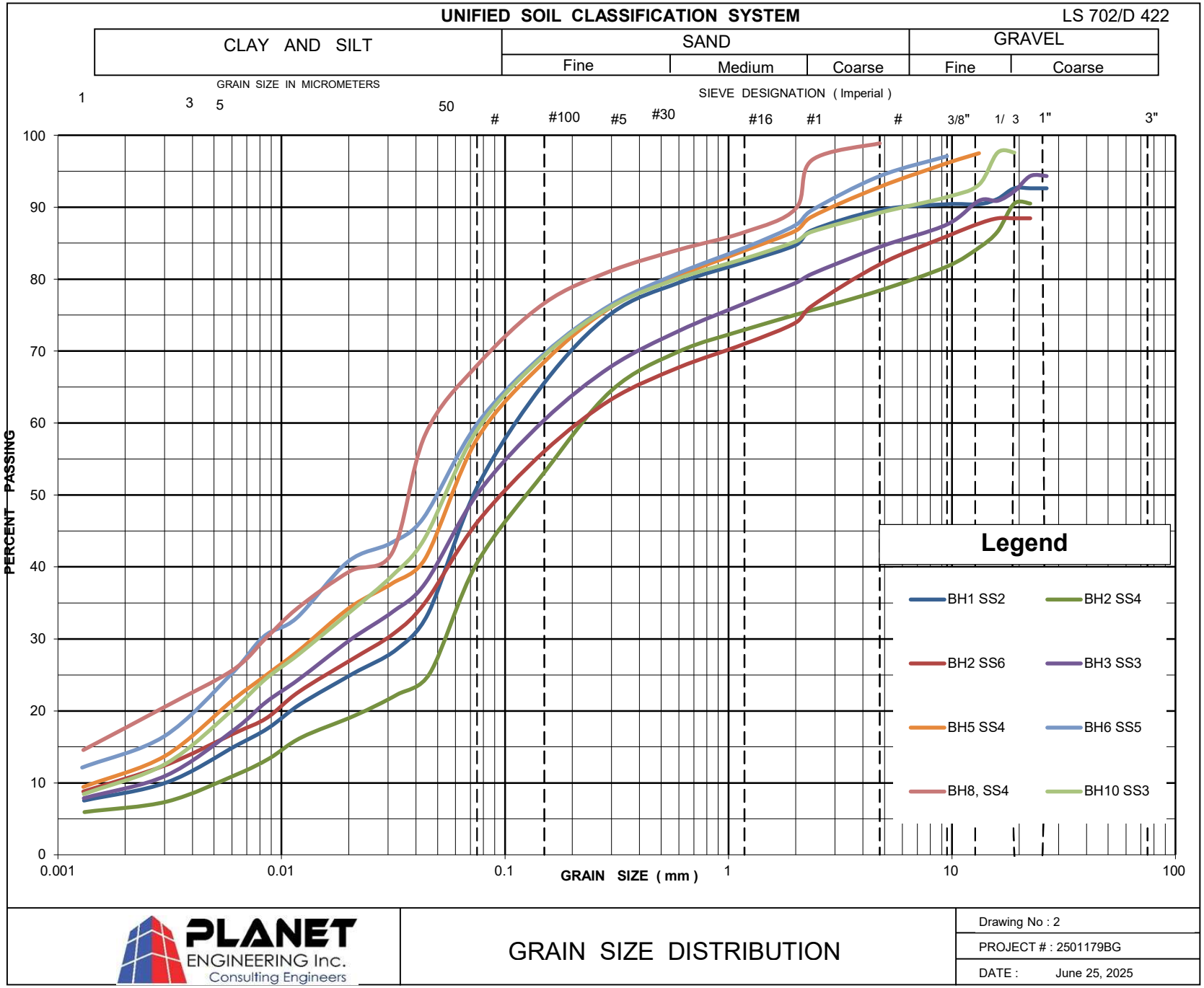

PLANET ENGINEERING Inc. Consulting Engineers

GRAIN SIZE DISTRIBUTION

Drawing No : 2

PROJECT # : 2501179BG

DATE : June 25, 2025

Drawing No. 3

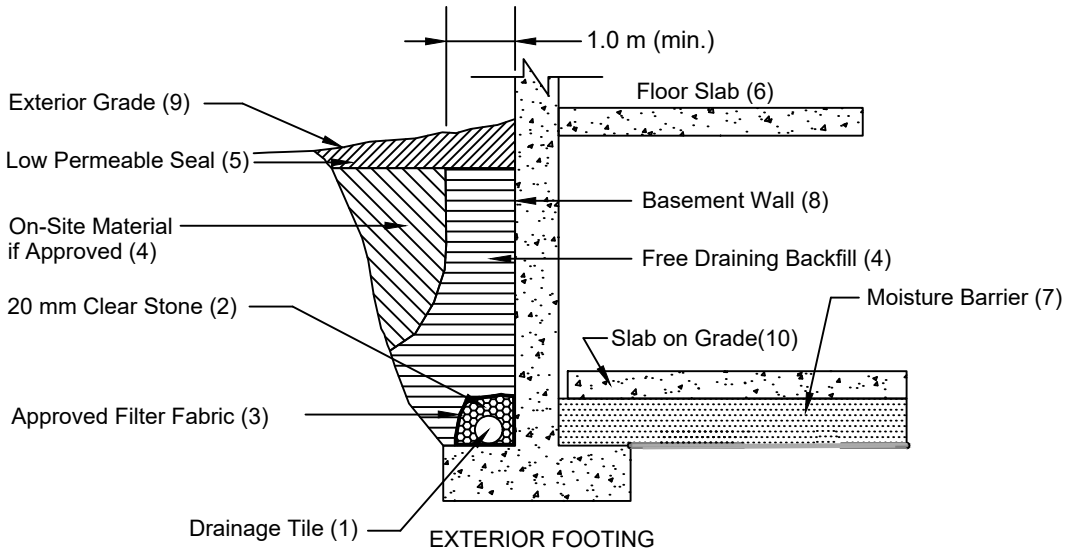

Notes

1. Drainage tile to consist of 100 mm (4") diameter weeping tile or equivalent perforated pipe leading to a positive sump or outlet.
2. 20 mm (3/4") clear stone - 150 mm (6") top and side of drain. If drain is not on footing, place100 mm (4 inches) of stone below drain .
3. Wrap the clear stone with an approved filter fabric (Terrafix 270R or equivalent).
4. Free Draining backfill - OPSS Granular B or equivalent compacted to the specified density. Do not use heavy compaction equipment within 450 mm (18") of the wall. Use hand controlled light compaction equipment within 1.8 m (6') of wall. The minimum width of the Granular 'B' backfill must be 1.0 m.
5. Low permeable backfill seal - compacted clay, clayey silt or paved with concrete/asphalt or equivalent. If original soil is free-draining, seal may be omitted. Maximum thickness of seal to be 0.5 m.
6. Do not backfill until wall is supported by basement and floor slabs or adequate bracing.
7. Moisture barrier to be at least 200 mm (8") of compacted clear 20 mm (3/4") stone or equivalent free draining material. A vapour barrier may be required for specialty floors.
8. Basement wall to be damp proofed for parking garage and water proofed for finished basement.
9. Exterior grade to slope away from building.
10. Typically slab on grade is not structurally connected to the wall or footing. However, if it is connected to the wall, it should be designed accordingly.
11. Drainage tile placed in parallel rows 6 to 8 m (20 to 25') centers one way. Place drain on 100 mm (4") clear stone with 150 mm (6") of clear stone on top and sides. Enclose stone with filter fabric as noted in (3).
12. The entire subgrade to be sealed with approved filter fabric (Terrafix 270R or equivalent) if non-cohesive (sandy) soils below ground water table encountered.
13. Review the geotechnical report for specific details. Final detail must be approved before system is considered acceptable.

DRAINAGE AND BACKFILL RECOMMENDATIONS
Basement with Underfloor Drainage
(not to scale)

PLANET ENGINEERING Inc.
Consulting Engineers

Title:

BACKFILL-BASEMENT-OPENCUT-WITHOUT GEOTEXTILE-MODEL DRAINAGE

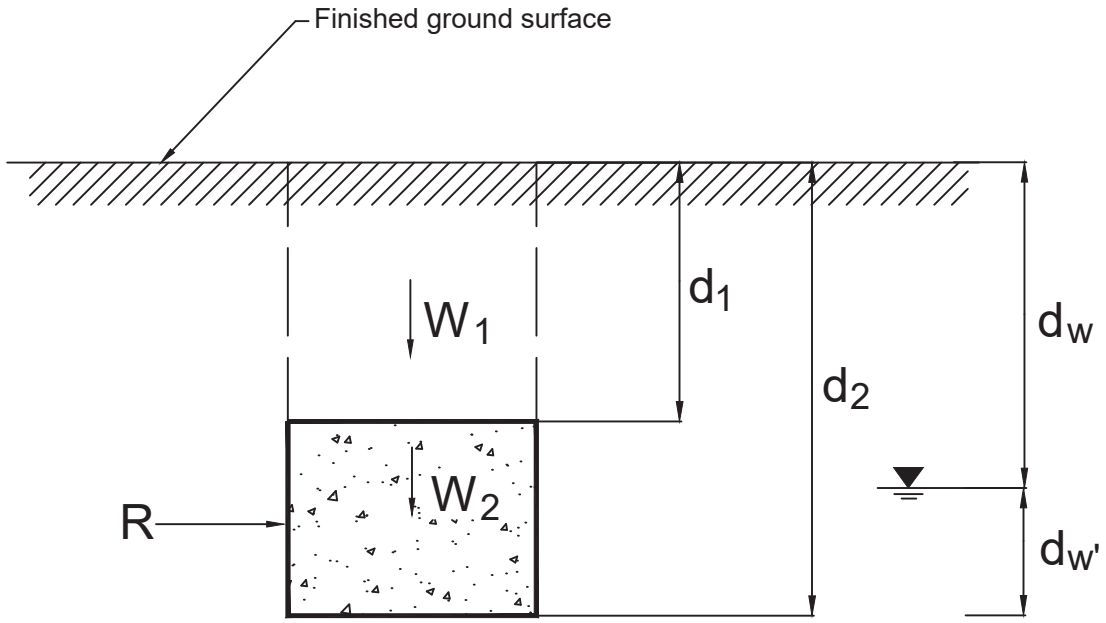

R = ultimate lateral resistance of thrust block

Case 1 dw < d1

$R = B[1/2\ Kp\gamma'(d2^2 - d1^2) + Kp\ \gamma w\ dw\ (d2 - d1)] + (W1 + W2)f$

Case 2 d1 < dw < d2

$R = B[1/2\ Kp\gamma(d2^2 - d1^2) - 1/2\ Kp\gamma w\ (dw')^2] + (W1 + W2)f$

Case 3 d2 < dw

$R = B[1/2\ Kp\gamma(d2^2 - d1^2)] + (W1 + W2)f$

R = Ultimate earth resistance, kN.

B = width of block, m.

Kp = coefficient of passive earth pressure = 2.5

γ = total unit weight of soil = 19 kN/m^3

γ' = submerged unit weight of soil = 9 kN/m^3

γw = unit weight of water = 10 kN/m^3

W1 = weight of soil above thrust block

W2 = weight of thrust block

f = coefficient of friction between block and soil = 0.3

Thrust Block Analysis

Drawing No. 5

Drawing 6

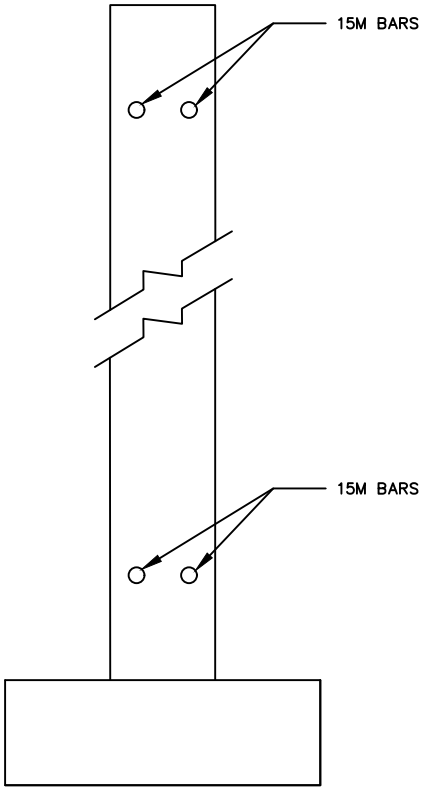

TYPICAL REINFORCED WALL

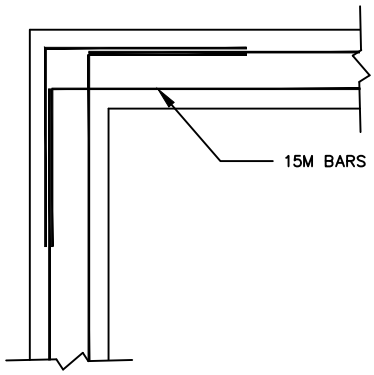

TYPICAL SPLICING AT CORNERS

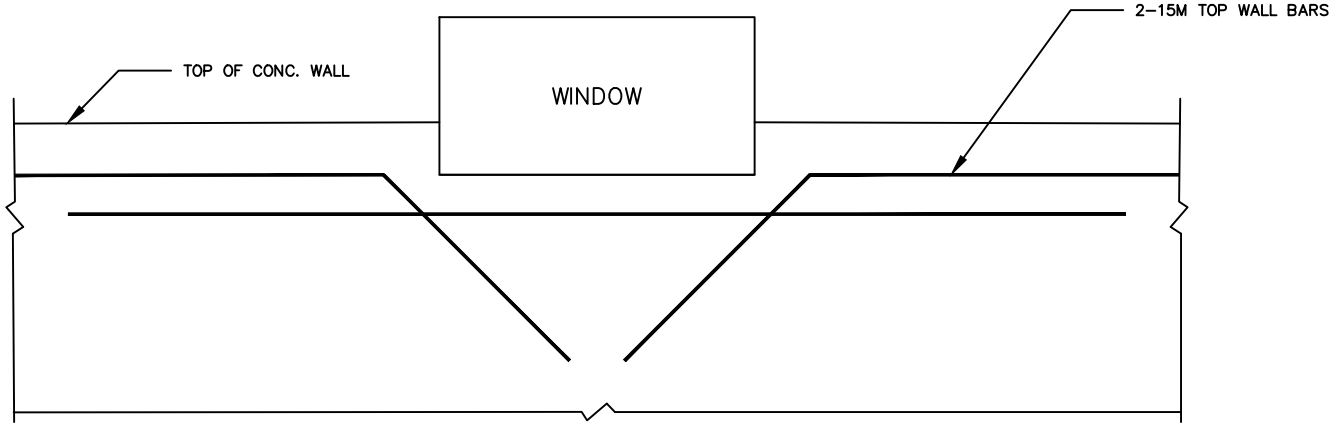

TYPICAL WINDOW REINFORCING

PLANET ENGINEERING Inc.
Consulting Engineers

FOUNDATION WALL REINFORCING ON ENGINEERED FILL
TYPICAL DETAIL

APPENDICES

Appendix A:
Limitations of Report

Limitations of Report

This report is intended solely for the Client named. The material in it reflects our best judgment in light of the information available to PLANET Engineering Inc. at the time of preparation. Unless otherwise agreed in writing by PLANET Engineering Inc, it shall not be used to express or imply warranty as to the fitness of the property for a particular purpose. No portion of this report may be used as a separate entity, it is written to be read in its entirety.

The conclusions and recommendations given in this report are based on information determined at the testhole locations. The information contained herein in no way reflects on the environment aspects of the project, unless otherwise stated. Subsurface and groundwater conditions between and beyond the testholes may differ from those encountered at the testhole locations, and conditions may become apparent during construction, which could not be detected or anticipated at the time of the site investigation. The benchmark and elevations used in this report are primarily to establish relative elevation differences between the testhole locations and should not be used for other purposes, such as grading, excavating, planning, development, etc.

The design recommendations given in this report are applicable only to the project described in the text and then only if constructed substantially in accordance with the details stated in this report.

The comments made in this report on potential construction problems and possible methods are intended only for the guidance of the designer. The number of testholes may not be sufficient to determine all the factors that may affect construction methods and costs. For example, the thickness of surficial topsoil or fill layers may vary markedly and unpredictably. The contractors bidding on this project or undertaking the construction should, therefore, make their own interpretation of the factual information presented and draw their own conclusions as to how the subsurface conditions may affect their work. This work has been undertaken in accordance with normally accepted geotechnical engineering practices.

Any use which a third party makes of this report, or any reliance on or decisions to be made based on it, are the responsibility of such third parties. PLANET Engineering Inc accepts no responsibility for damages, if any, suffered by any third party as a result of decisions made or actions based on this report.

We accept no responsibility for any decisions made or actions taken as a result of this report unless we are specifically advised of and participate in such action, in which case our responsibility will be as agreed to at that time. Any user of this report specifically denies any right to claims against the Consultant, Sub-Consultants, their officers, agents and employees in excess of the fee paid for professional services.

Appendix B:
Borehole Logs

PLANET ENGINEERING Inc. Consulting Engineers

RECORD OF BOREHOLE BH1

PROJECT: 2501179BG

LOCATION: 127 1st Line, Elora, Township of Centre Wellington, ON

CLIENT: Elora Greens Inc.

BH LOCATION: E 547648.964 N 4836223.994

DRILLING DATA

METHOD: Solid Stem Auger

DIAMETER: 150 mm

DATE: 2025-06-10

Ground Elevation: 397.4 m

SHEET 1 of 1

DATUM: Geodetic

DEPTH (m)	DESCRIPTION	STRATA PLOT	ELEV. (m)	SAMPLES NUMBER	SAMPLES TYPE	SAMPLES BLOWS	Grain size Distribution (%) GR SA	Grain size Distribution (%) SI CL	SHEAR STRENGTH kPa 20 40 60 80	WATER CONTENT (%) 10 20 30 40	WELL INSTALLATION
0	**Groundsurface:**		397.44								
	Topsoil: 150 mm		397.29								
	Disturbed natve / Fill: sandy silt till, trace to some gravel, trace to some clay, brown to grey, oxidized, very moist, loose to very loose			1		5					
			396.54								
1	**Silty Sand Till to Sandy Silt Till:** trace to some gravel, trace to some clay, brown to grey, oxidized, very moist to moist, very loose to very dense			2		2	10 39	42 9			
				3		7					
2				4		59					
3				5		60					
4											
5				6		39					
6				7		49					
			390.73								
7	**Upon completion:** borehole terminated at 6.7 m. Monitoring well installed upon completion.										

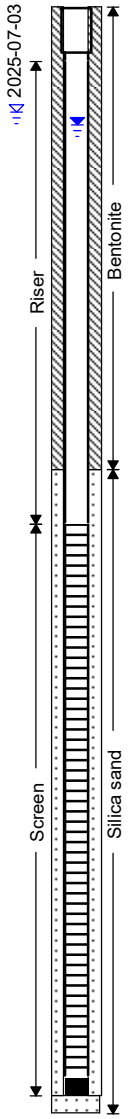

Upon completion:

1) Cave-in : Open

2) Water : 1.7 m

WATER LEVEL (1st) : 0.65 m (2025-06-19)

WATER LEVEL (2nd) : 0.58 m (2025-07-03)

LOGGED BY: A.P

REVIEWED BY : H.H

PLANET ENGINEERING Inc. Consulting Engineers

RECORD OF BOREHOLE BH2

PROJECT: 2501179BG

LOCATION: 127 1st Line, Elora, Township of Centre Wellington, ON

CLIENT: Elora Greens Inc.

BH LOCATION: E 547659.437 N 4836027.374

DRILLING DATA

METHOD: Solid Stem Auger

DIAMETER: 150 mm

DATE: 2025-06-10

Ground Elevation: 396.9 m

SHEET 1 of 1

DATUM: Geodetic

DEPTH (m)	DESCRIPTION	STRATA PLOT	ELEV. (m)	SAMPLES NUMBER	SAMPLES TYPE	SAMPLES BLOWS	Grain size Distribution (%) GR SA	Grain size Distribution (%) SI CL	SHEAR STRENGTH kPa (20 40 60 80)	WATER CONTENT (%) (10 20 30 40)	WELL INSTALLATION
0	**Groundsurface:**		396.94								
	Topsoil: 150 mm		396.79								
	Disturbed Native / Fill: silty sand till, trace to some gravel, trace to some clay, brown to grey, wet, loose to very loose			1		5				○	
1			395.84	2		3				○	
	Silty Sand Till to Sandy Silt Till: trace to some gravel, trace to some clay, oxidized, brown to grey, wet to moist, very loose to very dense			3		19				○	
2				4		2	22 37	34 7		○	
3				5		30				○	
4											
				6		50 / 100 mm	18 36	36 10		○	
5											
6				7		61				○	
			390.23								
	Upon completion: borehole terminated at 6.7 m.										
7											

Upon completion:

1) Cave-in : Open

2) Water : 1.1 m

WATER LEVEL (1st) : N/A

WATER LEVEL (2nd) : N/A

LOGGED BY: A.P

REVIEWED BY : H.H

PLANET ENGINEERING Inc. Consulting Engineers

RECORD OF BOREHOLE BH3

PROJECT: 2501179BG

LOCATION: 127 1st Line, Elora, Township of Centre Wellington, ON

CLIENT: Elora Greens Inc.

BH LOCATION: E 547791.666 N 4836078.004

DRILLING DATA

METHOD: Solid Stem Auger

DIAMETER: 150 mm

DATE: 2025-06-10

Ground Elevation: 396.7 m

SHEET 1 of 1

DATUM: Geodetic

DEPTH (m)	DESCRIPTION	STRATA PLOT	ELEV. (m)	SAMPLES NUMBER	SAMPLES TYPE	SAMPLES BLOWS	Grain size Distribution (%) GR SA	Grain size Distribution (%) SI CL	SHEAR STRENGTH kPa (20 40 60 80)	WATER CONTENT (%) (10 20 30 40)	WELL INSTALLATION
0	**Groundsurface:**		396.66								
	Topsoil: 300 mm		396.36	1		9					
	Disturbed Native / Fill : silty sand till, trace to some gravel, trace to some clay, brown to grey, oxidized, wet to very moist, loose		395.59	2		5					
1	**Silty Sand Till to Sandy Silt Till:** trace to some gravel, trace to some clay, brown to grey, oxidized, very moist to wet, loose to very dense			3		7	16 34	41 9			
2				4		87					
3				5		50 / 150 mm					
4				6		50 / 125 mm					
5				7		36					
6			389.95								
	Upon completion: borehole terminated at 6.7 m.										
7											

Upon completion:

1) Cave-in : Open

2) Water : 2.4 m

WATER LEVEL (1st) : N/A

WATER LEVEL (2nd) : N/A

LOGGED BY: A.P

REVIEWED BY : H.H

PLANET ENGINEERING Inc. Consulting Engineers

RECORD OF BOREHOLE BH4

PROJECT: 2501179BG

LOCATION: 127 1st Line, Elora, Township of Centre Wellington, ON

CLIENT: Elora Greens Inc.

BH LOCATION: E 547802.539 N 4835934.566

DRILLING DATA

METHOD: Solid Stem Auger

DIAMETER: 150 mm

DATE: 2025-06-10

Ground Elevation: 395.4 m

SHEET 1 of 1

DATUM: Geodetic

DEPTH (m)	DESCRIPTION	STRATA PLOT	ELEV. (m)	SAMPLES NUMBER	SAMPLES TYPE	SAMPLES BLOWS	Grain size Distribution (%) GR SA	Grain size Distribution (%) SI CL	SHEAR STRENGTH kPa (20 40 60 80)	WATER CONTENT (%) (10 20 30 40)	WELL INSTALLATION
0	**Groundsurface:**		395.39								
	Topsoil: 200 mm		395.19								
	Disturbed native / Fill: silty sand till, trace to some gravel, trace to some clay, brown to grey, wet to very moist, loose			1		5					
			394.39								
1	**Silty Sand Till to Sandy Silt Till:** trace to some gravel, trace to some clay, oxidized, brown to grey, very moist to moist, loose to very dense			2		7					
				3		19					
2				4		59					
3				5		50 / 150 mm					
4											
				6		50 / 150 mm					
5											
6				7		50 / 150 mm					
			388.98								
7											
			387.77								
8	**Upon completion**: borehole terminated at 7.6 m. Monitoring well installed upon completion.										

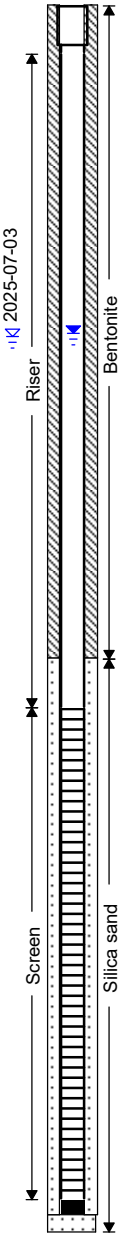

Upon completion:

1) Cave-in : Open

2) Water : 2.4 m

WATER LEVEL (1st) : 2.03 m (2025-06-19)

WATER LEVEL (2nd) : 2.05 m (2025-07-03)

LOGGED BY: A.P

REVIEWED BY : H.H

PLANET ENGINEERING Inc. Consulting Engineers

RECORD OF BOREHOLE BH5

PROJECT: 2501179BG

LOCATION: 127 1st Line, Elora, Township of Centre Wellington, ON

CLIENT: Elora Greens Inc.

BH LOCATION: E 547798.781 N 4836153.102

DRILLING DATA

METHOD: Solid Stem Auger

DIAMETER: 150 mm

DATE: 2025-06-10

Ground Elevation: 398.2 m

SHEET 1 of 1

DATUM: Geodetic

DEPTH (m)	DESCRIPTION	STRATA PLOT	ELEV. (m)	SAMPLES NUMBER	SAMPLES TYPE	SAMPLES BLOWS	Grain size Distribution (%) GR SA	Grain size Distribution (%) SI CL	SHEAR STRENGTH kPa (20 40 60 80)	WATER CONTENT (%) (10 20 30 40)	WELL INSTALLATION
0	**Groundsurface:**		398.16								
	Topsoil: 150 mm		398.01								
	Disturbed Native / Fill: silty sand till, trace to some gravel, trace to some clay, oxidized, brown to grey, very moist to moist, loose to compact			1		6				○	
			397.16	2		11				○	
1	**Silty Sand Till to Sandy Silt Till:** trace to some gravel, trace to some clay, oxidized, brown to grey, moist to very moist, loose to very dense			3		9				○	
				4		70	7 36	46 11		○	
2				5		91				○	
3											
				6		50 / 150 mm				○	
4											
				7		71				○	
5			391.45								
	Upon completion: borehole terminated at 6.7 m.										
6											
7											

Upon completion:

1) Cave-in : Open

2) Water : 2.4 m

WATER LEVEL (1st) : N/A

WATER LEVEL (2nd) : N/A

LOGGED BY: A.P

REVIEWED BY : H.H

PLANET ENGINEERING Inc. Consulting Engineers

RECORD OF BOREHOLE BH6

PROJECT: 2501179BG

LOCATION: 127 1st Line, Elora, Township of Centre Wellington, ON

CLIENT: Elora Greens Inc.

BH LOCATION: E 548158.856 N 4835573.928

DRILLING DATA

METHOD: Solid Stem Auger

DIAMETER: 150 mm

DATE: 2025-06-11

Ground Elevation: 390.4 m

SHEET 1 of 1

DATUM: Geodetic

DEPTH (m)	DESCRIPTION	STRATA PLOT	ELEV. (m)	SAMPLES NUMBER	SAMPLES TYPE	SAMPLES BLOWS	Grain size Distribution (%) GR SA	Grain size Distribution (%) SI CL	SHEAR STRENGTH kPa (20 40 60 80)	WATER CONTENT (%) (10 20 30 40)	WELL INSTALLATION
0	**Groundsurface:**		390.41								
	Topsoil: 250 mm		390.16								
	Fill / Disturbed natve: silty sand till, trace to some gravel, trace to some clay, brown to grey, very moist, loose to very loose		389.51	1		5					
1	**Silty Sand Till to Sandy Silt Till:** trace to some gravel, trace to some clay, oxidized, brown to grey, very moist to moist, very loose to very dense			2		1					
				3		15					
2				4		50					
3				5		50 / 150 mm	6 34	46 14			
4				6		50 / 150 mm					
5				7		50 / 150 mm					
6			384.01								
	Upon completion: borehole terminated at 6.4 m. Monitoring well installed upon completion.										
7											

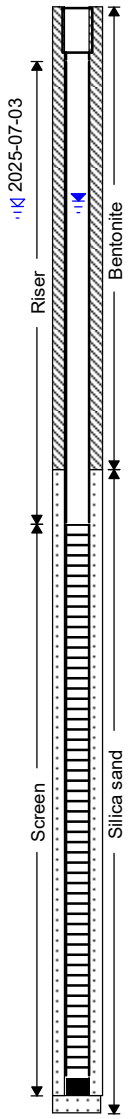

Upon completion:

1) Cave-in : Open

2) Water : 2.4 m

WATER LEVEL (1st) : 1.07 m (2025-06-19)

WATER LEVEL (2nd) : 1.10 m (2025-07-03)

LOGGED BY: A.P

REVIEWED BY : H.H

PLANET ENGINEERING Inc. Consulting Engineers

RECORD OF BOREHOLE BH7

PROJECT: 2501179BG

LOCATION: 127 1st Line, Elora, Township of Centre Wellington, ON

CLIENT: Elora Greens Inc.

BH LOCATION: E 548265.109 N 4835614.314

DRILLING DATA

METHOD: Solid Stem Auger

DIAMETER: 150 mm

DATE: 2025-06-16

Ground Elevation: 392.2 m

SHEET 1 of 1

DATUM: Geodetic

DEPTH (m)	DESCRIPTION	STRATA PLOT	ELEV. (m)	SAMPLES NUMBER	SAMPLES TYPE	SAMPLES BLOWS	Grain size Distribution (%) GR SA	Grain size Distribution (%) SI CL	SHEAR STRENGTH kPa (20 40 60 80)	WATER CONTENT (%) (10 20 30 40)	WELL INSTALLATION
0	**Groundsurface:**		392.23								
	Topsoil: 150 mm		392.08								
	Disturbed Native / Fill: silty sand till, trace to some gravel, trace to some clay, brown to grey, very moist, loose		391.77	1		9					
1	**Silty Sand Till to Sandy Silt Till:** trace to some gravel, trace to some clay, brown to grey, very moist to moist, loose to very dense			2		13					
2				3		9					
				4		34					
3				5		36					
4											
				6		50 / 150 mm					
5											
6				7		50 / 150 mm					
			385.83								
7	**Upon completion:** borehole terminated at 6.4 m. Monitoring well installed upon completion.										

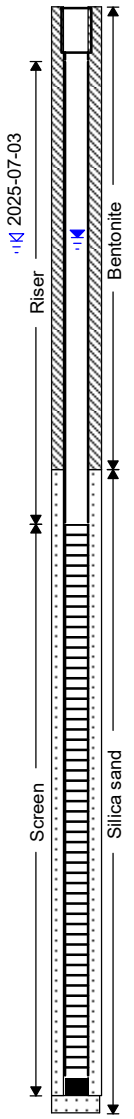

Upon completion:

1) Cave-in : Open

2) Water : 2.4 m

WATER LEVEL (1st) : 1.27 m (2025-06-19)

WATER LEVEL (2nd) : 1.29 m (2025-07-03)

LOGGED BY: A.P

REVIEWED BY : H.H

PLANET ENGINEERING Inc. Consulting Engineers

RECORD OF BOREHOLE BH8

PROJECT: 2501179BG

LOCATION: 127 1st Line, Elora, Township of Centre Wellington, ON

CLIENT: Elora Greens Inc.

BH LOCATION: E 548159.068 N 4835792.755

DRILLING DATA

METHOD: Solid Stem Auger

DIAMETER: 150 mm

DATE: 2025-06-10

Ground Elevation: 395.4 m

SHEET 1 of 1

DATUM: Geodetic

DEPTH (m)	DESCRIPTION	STRATA PLOT	ELEV. (m)	SAMPLES NUMBER	SAMPLES TYPE	SAMPLES BLOWS	Grain size Distribution (%) GR SA	Grain size Distribution (%) SI CL	SHEAR STRENGTH kPa (20 40 60 80)	WATER CONTENT (%) (10 20 30 40)	WELL INSTALLATION
0	**Groundsurface:**		395.44								
	Topsoil: 200 mm		395.24								
	Disturbed Native / Fill: silty sand till, trace to some gravel, trace to some clay, brown to grey, wet to very moist, loose			1		5				○	
			394.53								
1	**Silty Sand Till to Sandy Silt Till:** trace to some gravel, trace to some clay, brown to dark grey, very moist to moist, loose to very dense			2		4				○	
				3		9				○	
2				4		10	3 39	47 11		○	
3				5		68				○	
4				6		50 / 150 mm				○	
5				7		50 / 150mm				○	
6			389.04								
	Upon completion: borehole terminated at 6.4 m.										
7											

Upon completion:

1) Cave-in : Open

2) Water : 1.8 m

WATER LEVEL (1st) : N/A

WATER LEVEL (2nd) : N/A

LOGGED BY: A.P

REVIEWED BY : H.H

PLANET ENGINEERING Inc. Consulting Engineers

RECORD OF BOREHOLE BH9

PROJECT: 2501179BG

LOCATION: 127 1st Line, Elora, Township of Centre Wellington, ON

CLIENT: Elora Greens Inc.

BH LOCATION: E 547954.136 N 4835898.164

DRILLING DATA

METHOD: Solid Stem Auger

DIAMETER: 150 mm

DATE: 2025-06-16

Ground Elevation: 396.4 m

SHEET 1 of 1

DATUM: Geodetic

DEPTH (m)	DESCRIPTION	STRATA PLOT	ELEV. (m)	SAMPLES NUMBER	SAMPLES TYPE	SAMPLES BLOWS	Grain size Distribution (%) GR SA	Grain size Distribution (%) SI CL	SHEAR STRENGTH kPa (20 40 60 80)	WATER CONTENT (%) (10 20 30 40)	WELL INSTALLATION
0	**Groundsurface:**		396.40								
	Topsoil: 150 mm		396.25								
	Disturbed Native / Fill: silty sand till, trace to some gravel, trace to some clay, brown to blackish grey, very moist, loose to compact			1		6				○	
			395.40	2		29				○	
1	**Silty Sand Till to Sandy Silt Till:** trace to some gravel, trace to some clay, oxidized, brown to grey, very moist to moist, compact to very dense			3		20				○	
2				4		33				○	
3				5		86				○	
4				6		90				○	
5				7		50 150mm				○	
6			389.85								
	Upon completion: borehole terminated at 6.6 m.										
7											

Upon completion:

1) Cave-in : Open

2) Water : N/A

WATER LEVEL (1st) : N/A

WATER LEVEL (2nd) : N/A

LOGGED BY: A.P

REVIEWED BY : H.H

PLANET ENGINEERING Inc. Consulting Engineers

RECORD OF BOREHOLE BH10

PROJECT: 2501179BG

LOCATION: 127 1st Line, Elora, Township of Centre Wellington, ON

CLIENT: Elora Greens Inc.

BH LOCATION: E 547949.989 N 4836018.364

DRILLING DATA

METHOD: Solid Stem Auger

DIAMETER: 150 mm

DATE: 2025-06-16

Ground Elevation: 398.7 m

SHEET 1 of 1

DATUM: Geodetic

DEPTH (m)	DESCRIPTION	STRATA PLOT	ELEV. (m)	SAMPLES NUMBER	SAMPLES TYPE	SAMPLES BLOWS	Grain size Distribution (%) GR SA	Grain size Distribution (%) SI CL	SHEAR STRENGTH kPa (20 40 60 80)	WATER CONTENT (%) (10 20 30 40)	WELL INSTALLATION
0	**Groundsurface:**		398.74								
	Topsoil: 200 mm		398.54								
	Disturbed natve / Fill: silty sand till, trace to some gravel, trace to some clay, brown to grey, very moist, loose			1		5					
1			397.67	2		8					
	Silty Sand Till to Sandy Silt Till: trace to some gravel, trace to some clay, brown to grey, very moist to moist, loose to very dense			3		12	11 30	49 10			
2				4		75					
3				5		50 / 150 mm					
4											
				6		50 / 150 mm					
5											
6				7		50 / 150 mm					
			392.34								
7	**Upon completion:** borehole terminated at 6.4 m. Monitoring well installed upon completion.										

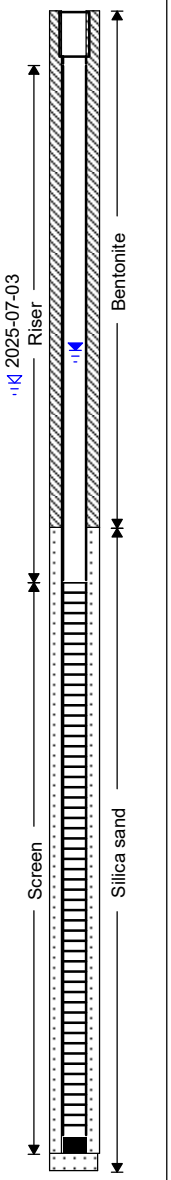

Upon completion:

1) Cave-in : Open

2) Water : N/A

WATER LEVEL (1st) : 1.87 m (2025-06-19)

WATER LEVEL (2nd) : 2.05 m (2025-07-03)

LOGGED BY: A.P

REVIEWED BY : H.H

Appendix C:

General Requirements for Engineered Fill

GENERAL REQUIREMENTS FOR ENGINEERED FILL

Compacted imported soil that meets specific engineering requirements and is free of organics and debris and that has been continually monitored on a full-time basis by a qualified geotechnical representative is classified as engineered fill. Engineered fill that meets these requirements and is bearing on suitable native subsoil can be used for the support of foundations.

Imported soil used as engineered fill can be removed from other portions of a site or can be brought in from other sites if suitable. In general, most of Ontario soils are too wet to achieve the 100% Standard Proctor Maximum Dry Density (SPMDD) and will require drying and careful site management if they are to be considered for engineered fill. Imported non-cohesive granular soil is preferred for all engineered fill. For engineered fill, Planet Engineering Inc (PLANET) recommends use of OPSS Granular 'B' sand and gravel fill material only.

Adverse weather conditions such as rain make the placement of engineered fill to the required degree of density difficult or impossible; engineered fill should not be placed during freezing conditions, i.e. normally not between December 15 and April 1 of each year. If the project demands placement of engineered fill in winter (December 15- April1) it can be placed only under the following conditions:

- All frozen material and or snow must be removed before placement of engineered fill on a daily basis
- Only Granular B Type 2 or Granular A (including crushed concrete or crushed limestone)
- The fill placement must be supervised on a full time basis by a geotechnical consultant

The location of the foundations on the engineered soil pad is critical and certification by a qualified surveyor that the foundations are within the stipulated boundaries is mandatory. Since layout stakes are often damaged or removed during fill placement, offset stakes must be installed and maintained by the surveyors during the course of fill placement so that the contractor and engineering staff are continually aware of where the engineered fill limits lie. Foundations placed within the engineered soil pad must be backfilled with the same conditions and quality control as the original pad.

To perform satisfactorily, engineered fill requires the cooperation of the designers, engineers, contractors and all parties must be aware of the requirements. The minimum requirements are as follows, however, the geotechnical report must be reviewed for specific information and requirements.

1. Prior to site work involving engineered fill, a site meeting to discuss all aspects must be convened. The surveyor, contractor, design engineer and geotechnical engineer must attend the meeting. At this meeting, the limits of the engineered fill will be defined. The contractor must make known where all fill material will be obtained and samples must be provided to the geotechnical engineer for review, and approval before filling begins.

2. Detailed drawings indicating the lower boundaries as well as the upper boundaries of the engineered fill must be available at the site meeting and be approved by the geotechnical engineer.

3. The building footprint and base of the pad, including basements, garages, etc. must be defined by offset stakes that remain in place until the footings and service connections are all constructed. Confirmation that the footings are within the pad, service lines are in place, and that the grade conforms to drawings, must be obtained by the owner in writing from the surveyor and Planet Engineering Inc. Without this confirmation no responsibility for the performance of the structure can be accepted by Planet Engineering Inc. Survey drawing of the pre and post fill location and elevations will also be required.

4. The area must be stripped of all topsoil and fill materials. Subgrade must be proof rolled. Soft spots must be dug out. The stripped native subgrade must be examined and approved by an engineer from Planet Engineering Inc. prior to placement of fill.

5. The approved engineered fill must be compacted to 100% Standard Proctor Maximum Dry Density throughout. Granular Fill preferred. Engineered fill should not be placed (where it will support footings) during the winter months. Engineered fill compacted to 100% SPMDD will settle under its own weight approximately 0.5% of the fill height and the structural engineer must be aware of this settlement. In addition to the settlement of the fill, additional settlement due to consolidation of the underlying soils from the structural and fill loads will occur and should be evaluated prior to placing the fill.

6. Full-time geotechnical inspection by Planet Engineering during placement of engineered fill is required. Work cannot commence or continue without the presence of Planet Engineering representative.

7. The fill must be placed such that the specified geometry is achieved. Refer to sketches for minimum requirements. Take careful note that the projection of the compacted pad beyond the footing at footing level is a minimum of 2 m. The base of the compacted pad extends 2 m plus the depth of excavation beyond the edge of the footing.

8. The allowable bearing pressure provided in the accompanying report may be used provided that all conditions outlined above are adhered to. A minimum footing width of 500 mm (20 inches) is suggested and footings must be provided with nominal steel reinforcement.

9. All excavations must be done in accordance with the Occupational Health and Safety Regulations of Ontario.

10. After completion of the pad a second contractor may be selected to install footings. The prepared footing bases must be evaluated by engineering staff from Planet Engineering Inc. prior to footing concrete placements. All excavations must be backfilled under full time supervision by Planet Engineering Inc. representative to the same degree as the engineered fill pad. Surface water cannot be allowed to pond in excavations or to be trapped in clear stone backfill. Clear stone backfill can only be used with the approval of Planet Engineering Inc.

11. After completion of compaction, the surface of the pad must be protected from disturbance from traffic, rain and frost. During the course of fill placement, the engineered fill must be smooth-graded, proof rolled and sloped/crowned at the end of each day, prior to weekends and any stoppage in work in order to promote rapid runoff of rainwater and to avoid any ponding surface water. Any stockpiles of fill intended for use as engineered fill must also be smooth-bladed to promote runoff and/or protected from excessive moisture take up.

12. If there is a delay in construction, the engineered fill pad must be inspected and accepted by the geotechnical engineer. The location of the structure must be reconfirmed that it remains within the pad.

13. The geometry of the engineered fill as illustrated in these General Requirements is general in nature. Each project will have its own unique requirements. For example, if perimeter sidewalks are to be constructed around the building, then the projection of the engineered fill beyond the foundation wall may need to be greater.

14. These guidelines are to be read in conjunction with Planet Engineering Inc. report attached.

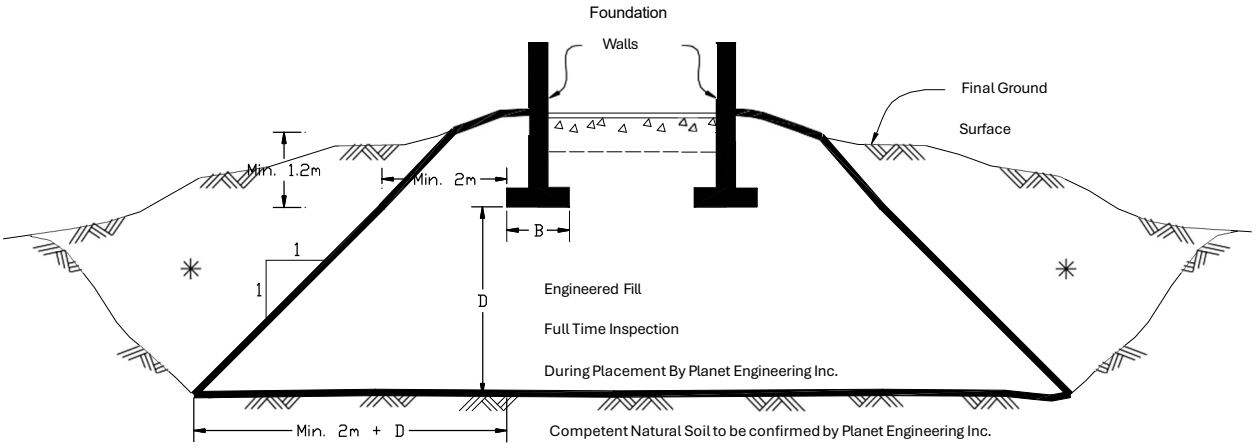

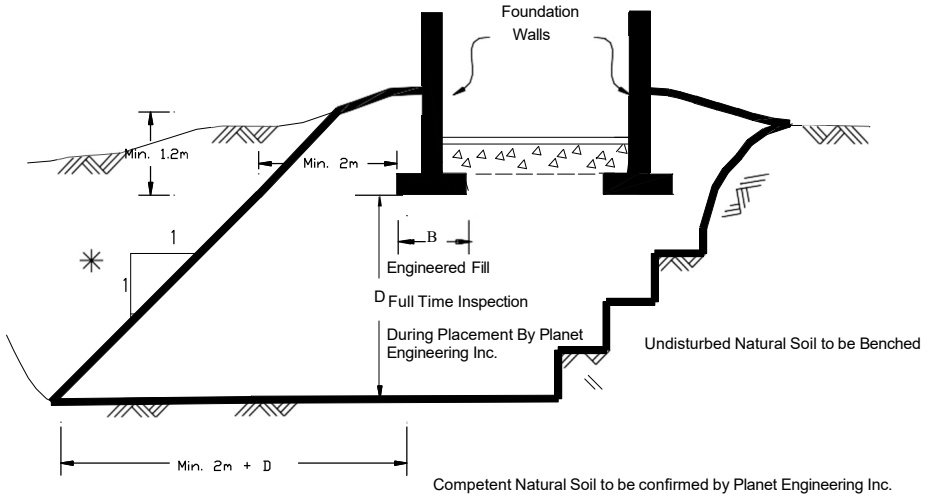

✳ Backfill in this area to be as per the Planet Engineering Inc. report

Appendix D:

Proposed Site Plan Provided by the Client

DRAFT PLAN OF SUBDIVISION

LEGAL DESCRIPTION

PT LT 3 CON 1 NICHOL PART 2 , 61R501;
TOWNSHIP OF CENTRE WELLINGTON
COUNTY OF WELLINGTON

OWNER'S CERTIFICATE

I HEREBY AUTHORIZE MACNAUGHTON HERMSEN BRITTON CLARKSON PLANNING LIMITED TO SUBMIT THIS PLAN FOR APPROVAL.

Date: _____

_____
Farhan Kamali Siddiqui
Elora Greens Inc.

Date: _____

_____
Mohammad Tahir

SURVEYOR'S CERTIFICATE

I HEREBY CERTIFY THAT THE BOUNDARIES OF THE LAND TO BE SUBDIVIDED ON THIS PLAN AND THEIR RELATIONSHIP TO THE ADJACENT LANDS ARE ACCURATELY AND CORRECTLY SHOWN.

Date: _____

_____
James M. Laws, Surveyor, O.L.S.
Van Harten Surveying Inc.

KEY PLAN

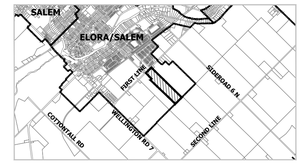

Scale: N.T.S

ADDITIONAL INFORMATION
Required Under Section 51 (17) of the Planning Act, R.S.O., 1990, c.P.13 as Amended

(a) As Shown	(b) As Shown	(c) As Shown
(d) Residential, Mixed Use, Park, Trail, Pump Station, Stormwater Management		
(e) As Shown	(f) As Shown	(g) As Shown
(h) Municipal Water Supply	(i) Clay/Sandy Loam	(j) As Shown
(k) All Services As Required	(l) As Shown	

AREA SCHEDULE

DESCRIPTION	LOTS/BLOCKS	UNITS	AREA
Low Density Residential	1-18	202-472	9.327 ha
Multiple Residential	19,20	60-131	1.751 ha
Mixed Use	21	34-74	0.988 ha
Park	22-25		1.287 ha
Trail	26		1.057 ha
Walkways	27,28		0.042 ha
Pump Station	29		0.263 ha
Stormwater Management	30		1.992 ha
0.3m Reserve	31-33		0.003 ha
Roads			4.871 ha
Total	**33**	**296-677**	**21.581 ha**

NOTES

1. All dimensions are in metres unless otherwise shown.
2. Contains information licensed under the Open Government Licence - Ontario.

Revision No.	Date	Issued / Revision	By
1.	March 6, 2026	Preliminary Draft Plan;	PL

Stamp	**Date** March 6, 2026
	File No. 24277A
	Plan Scale 1:1500 (Arch D)
	Drawn By P.L.
	Checked By P.S.
Project Elora Green 127 First Line, Township of Centre Wellington, County of Wellington.	
File Name DRAFT PLAN OF SUBDIVISION	**Dwg No.** 1 of 1
Scale Bar 0 10 25 50 100 150m	

K:\24277A-127 First Line-Centre Wellington\DP\DP_SPlan2026.dwg

MHBC PLANNING URBAN DESIGN & LANDSCAPE ARCHITECTURE